FURRION

SINGLE BURNER INDUCTION COOKTOP

MODEL: FIH1ZEA-BG

USER MANUAL

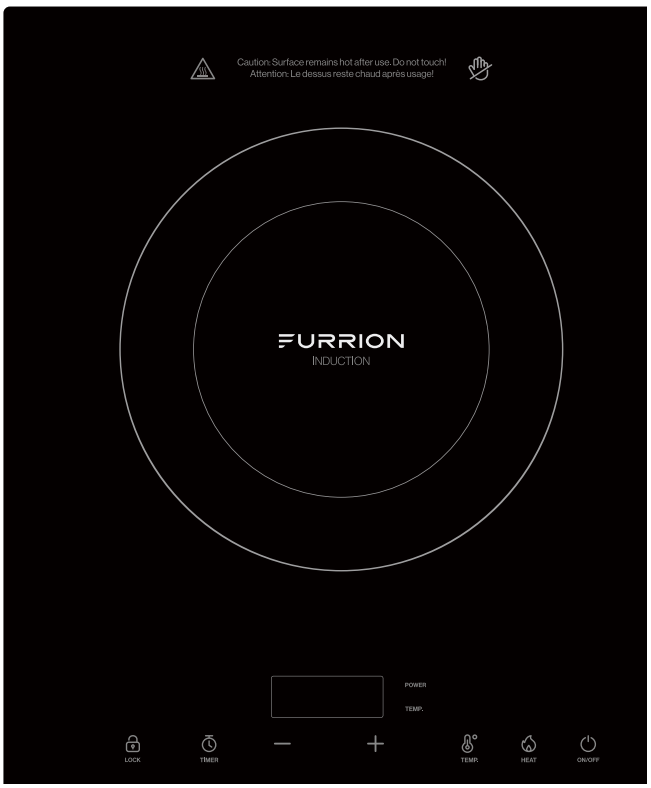

* Product picture for reference only

Thank you for purchasing this Furrion® product. Before operating or installing, please read these instructions carefully. This user manual contains information for safe use, installation, and maintenance of the product.
Please keep this user manual in a safe place for future reference. Be sure to pass on this manual to new owners of this product.
The manufacturer does not accept responsibility for any damages due to not observing these instructions.

Table of Contents

Table of Contents 1
About Induction Cooking 2
Explanation of Symbols 2
Important Safety Instructions 2
Product Overview 3
Installation 3
- What's in the Box 3
- Electrical Connection 3
- Countertop Use 3
- Drop-in Use 3
- After Installation 4

Operation 4
Operational Cooktop Noises 5
Compatible Cookware 5
Cleaning and Maintenance 5
Troubleshooting 6
Error Code 6
Specifications 6

About Induction Cooking

- Induction cooking is a safe, advanced, and efficient cooking technology. Instant heat is generated by electromagnetic induction directly at the cookware bottom, rather than indirectly through heating the glass surface. The glass becomes hot only because the cookware warms it up.
- Our induction cooktop has been tested and complies with Part 18 of the FCC Rules for ISM equipment. Product meets the FCC requirements to minimize interference with other devices.

Explanation of Symbols

This manual has safety information and instructions to help you eliminate or reduce the risk of accidents and injuries. Always respect all safety warnings identified with these symbols. A signal word will identify safety messages and property damage messages, and will indicate the degree or level of hazard seriousness.

⚠ DANGER

Indicates an imminently hazardous situation which, if not avoided, will result in death or serious injury.

⚠ WARNING

Indicates a potentially hazardous situation which, if not avoided, could result in death or serious injury.

⚠ CAUTION

Indicates a potentially hazardous situation which, if not avoided, may result in minor or moderate personal injury, or property damage.

Important Safety Instructions

- Read all instructions before using the cooktop.
- When using this electrical appliance, basic safety precautions should always be followed. For this induction cooktop, even with the built-in safety features, it is essential to observe all safety precautions.
- Installation of the appliance into a kitchen countertop and its connection to the main power and electrical supply may only be performed by a qualified technician.
- While cooking with fat or oil on the cooktop there is a risk of burning or fire; therefore, never leave the cooktop unattended at any time.
- When the cooktop is on, or after the cooktop has been turned off, do not touch outside the control panel as the surface may contain residual heat.
- To protect against electric shock, do not immerse cord plugs or cooktop in water (or other liquid).
- When using any electric appliance around children, close supervision is required.
- Do not operate any appliance with a damaged cord or plug.
- Do not cook on a broken or damaged cooktop as spillovers may penetrate surface and create a risk of electric shock.
- To avoid potential injury, do not use accessory attachments which aren't recommended by the manufacturer.
- Do not use the cooktop outdoors, this induction cooktop is designed for household use only.
- Do not let the cord dangle over the edge of a table or counter. Keep the cord away from hot surface.
- Do no place cooktop on or near a hot gas, electric element or in a heated oven.
- Avoid preparing food in aluminum foil or plastic containers over the hot induction heater areas.
- Do not store and temperature-sensitive objects, materials, or substances underneath the cooktop, such as detergents and sprays etc..
- To prevent accidents and achieve optimal fan ventilation, allow for sufficient space around the cooking area.
- Items with a magnetic field such as: radios, televisions, credit cards, cassette tape etc., can be affected by the cooktop.
- The marked electrical rating of the cord should be at least as great as the electrical rating on the cooktop.
- The cord should be arranged so that it will not drape over the countertop or tabletop where it can be pulled on by children or tripped over.
- Do not use with empty pans/pots.
- Do not use cooktop for use other than directed by the manufacturer.
- **Wear proper apparel -** loose fitting or hanging garments should never be worn while using the cooktop.
- In case of cooktop failure, immediately disconnect the cooktop from the main power source and contact the manufacturer.
- Do not place metallic objects such as knives, forks, spoons, lids, cans or aluminum foil on the cooktop.
- It is important to be aware that the cooktop's surface will remain hot for a period of time after use.
- When possible, unplug the cooktop from the outlet when not in use and before cleaning. Allow it to cool down before performing any maintenance or repairs.
- Clean cooktop with caution - do not clean while cooktop is still hot, some cleaners produce steam or fumes if applied to a heated surface.
- Do not store items of interest to children in cabinets above the cooktop or on the backguard of a cooktop - children climbing on the cooktop to reach items may get seriously injured.
- Do not repair or replace any part of the cooktop unless specifically recommended in the manual. All other services should be referred to a qualified technician.
- **Use only dry potholders -** Moist or damp potholders on hot surfaces may result in burns from steam. Do not use a towel or other cloth.
- **Use proper cookware size -** Choose cookware with a flat bottom large enough to cover the cooktop heating surface. The use of undersized cookware will expose a portion of the heating surface where direct contact may be made and cause serious injury. Compatible cookware is necessary to operate properly.
- **Protective liners -** Do not use aluminum foil to line induction heat areas, drip bowls or oven bottoms; except as suggested in the manual. Improper use of these liners may result in a risk of electric shock or fire.
- To reduce risk of burns, ignition of flammable materials, and spillage due to unintentional contact with cookware, the cookware handles should be turned inward and not extend over adjacent heating surface.
- Do not use steam cleaners or high pressure cleaners to clean the cooktop, as this may result in electric shock.
- **Do not touch induction heater area or areas near cooktop -** induction heater areas may be hot even though they are dark in color. Areas near induction heater areas may become hot enough to cause burns. During and after use, do not touch, or let clothing or other materials contact the flammable contact the induction heater area or areas near the units until they have had sufficient time to cool.

NOTE: This product should not be thrown away as household waste. Instead it should be handed over to the applicable collection point for the recycling of electrical and electronic equipment. By ensuring this product is disposed of correctly, you will help prevent potential negative consequences to the environment and human health, which could otherwise be caused by inappropriate waste handling of this product. For more detailed information about recycling of this product, please contact your local city office, your household waste disposal service or the store where you purchased the product.

SAVE THESE INSTRUCTIONS FOR FUTURE REFERENCE!

Product Overview

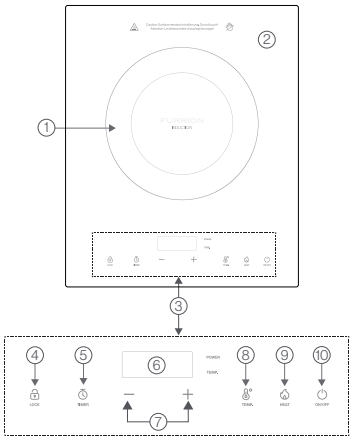

Item	Description
1	Induction Element
2	Ceramic Glass
3	Control Panel
4	Child Safety Lock Key
5	Timer Key
6	Digital Display
7	Power, Temp and Power Adjustment Keys
8	Temp. Mode Key
9	Heat Mode Key
10	ON/OFF Key

NOTE: The illustration may look different from actual product.

Installation

This cooktop is not user serviceable. Installation must be completed by a qualified technician.

⚠ WARNING

Do not store or use gasoline or other flammable vapors and liquids in the vicinity of this or any other appliance.
To eliminate the risk of burns or fire due to overheating, cabinets located above the induction cooktop can be protected by using a range hood. Follow the range hood installation instructions and/or local codes when installing the cabinetry around the induction cooktop.

NOTE: All electric cooktops run off a single phase, three-wire cable, 120V/60Hz AC only electrical supply with ground. The installation should be made using wires, conduits, and fittings size in accordance with the National Electrical Code, ANSI/NFPA 70.

What's in the Box

Make sure all the following items are included in the packaging. If any item is damaged or missing, contact your dealer.

- Induction Cooktop x 1
- User Manual
- Warranty Manual

Electrical Connection

Connect the cooktop to a 120V, 60Hz, AC only, 15A dedicated circuit. It is recommended that a separate circuit serving only the cooktop be provided.

Countertop Use

The cooktop comes with 4 rubber feet attached to the bottom to prevent sliding. It can be placed on a flat surface for countertop use.
Select an open area and place the cooktop on a dry, stable and level surface where the plug will reach an electrical outlet.

Drop-in Use

Before Installing the Induction Cooktop

1. Ensure that cooktop is turned off.
2. Visually inspect the cooktop for damage. Make sure all cooktop screws are tightened.

Induction Cooktop Installation

1. Cut an opening in the counter surface. Refer to the drawings on the following pages for appropriate dimensions and follow these instructions:
   - Select heat-resistant table material to avoid damage caused by heat radiation.
   - Ensure that the underside of the induction cooktop is well ventilated and the air inlet is not blocked.
   - The distance between the cooktop and any cupboard above the cooktop should be at least 30" (762mm).
2. After cutting the opening, remove any shavings or other loose material that may interfere with the appliance's operation.
3. Place the cooktop into the countertop cutout.
4. Plug the power cord into the dedicated grounded electrical outlet.
   NOTE:
   - Do not seal the cooktop to the countertop. The cooktop may be removed if service is necessary.
   - For unframed installation, adhere foam strip to the outer edge of the glass.
   - For installation into an RV, apply butyl tape instead of the supplied foam tape. Butly tape will provide adequate adhesion and still allow for removal if the unit needs to be serviced.
   - The power cord is located on the top right side of the cooktop. Locate the grounded electrical outlet in an accessible area reachable by the cooktop power cord.

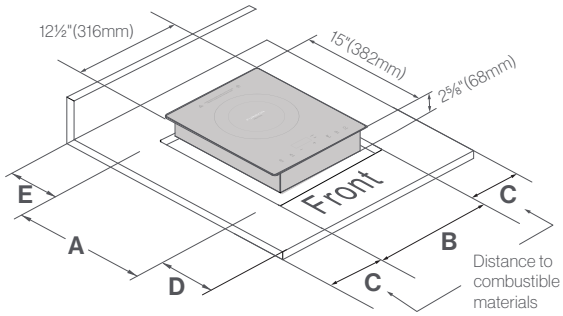

Dimensions				
A	B	C	D	E
Min. 14" (355mm) Max. 14 5/16" (365mm)	Min. 11⅝"(295mm) Max. 11⅞"(303mm)	Min. 2" (51mm)	Min. 2½" (64mm)	Min. 2" (51mm)

NOTE: Dimensions C and E are the distance to the combustible materials from the edge of the cutout.

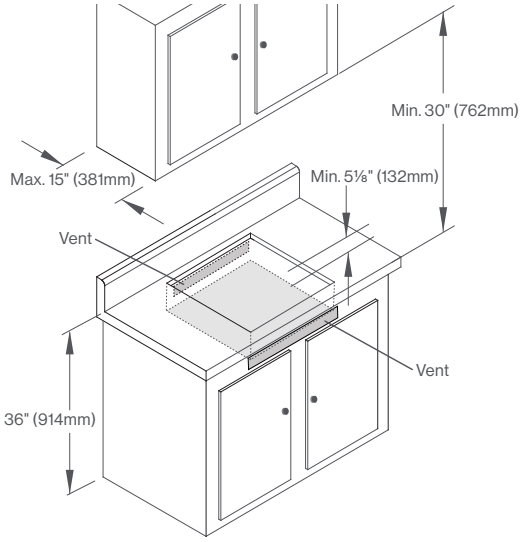

Overall Dimensions	
Product Dimension (W x H x D)	12½ x 2⅝ x 15" (316 x 68 x 382mm)
Cut-out Height Clearance	Min. 5⅛" (132mm)
Cut-out Dimension (W x D)	Min. 11⅝ x 14" (295 x 355mm) Max. 11 ⅞ x 14⅜" (303 x 365mm)

After Installation

1. Remove all the stickers and items from the top of the cooktop surface.
2. Clean cooktop before use. Dry with a soft cloth. See **Cleaning and Maintenance** for reference.
3. Read the **Operation** section before use.
4. Turn on the power to the cooktop.
5. Verify all functions work properly.

NOTE: If the cooktop does not work properly, please check that the circuit breaker is not tripped. See **Troubleshooting** for more information. If you cannot not solve the problem by yourself, please call us for assistance or service.

Operation

- This cooktop will get hot while in use and will remain hot for a while after use.
- Never heat empty cookware. This can damage both the cookware and the cooktop.
- Remember to turn off the cooktop after use.
- Make sure to wipe off water from the bottom of the cookware before using.

Standby Mode

Upon inserting the power plug into the power socket, the induction cooktop will emit a "beep" sound once, and all the LEDs on the cooktop will blink once, indicating the cooktop has entered into the standby mode.

Child Safety Lock

Child Safety Lock is activated when the cooktop is in standby mode: Child Safety Lock prevents activation of any key, except for **LOCK** (🔒), so you must deactivate the Control Lock first, then touch **ON/OFF** (⏻) to turn on the cooktop.
Child Safety Lock is activated when the cooktop is in use: Child Safety Lock prevents activation of any key, except for the **ON/OFF** (⏻) and **LOCK** (🔒) keys.
Manual Lock: Press the **LOCK** (🔒), a "beep" will sound and the indicator light above LOCK (🔒) will be lit up.
Auto Lock: The cooktop will automatically enter AUTO LOCK mode after being turned off for 5 min.
Unlock: Press the **LOCK** (🔒), a "beep" will sound and the indicator light will be turned off.

Ready Mode

In standby mode, press **ON/OFF** (⏻) to turn on the cooktop, a "beep" sound will be emitted and the heat mode, temp. mode and on/off indicators will be blinking indicating that the cooktop is ready to use.
NOTE: The cooktop will return to standby mode automatically if it has been idle for 60 seconds.

Turn Off the Cooktop

⚠ CAUTION

Do not unplug the power cord from the electrical outlet until the fan has stopped after using the cooktop.

When cooking has finished, press **ON/OFF** (⏻) to turn off the cooktop, a "beep" sound will be emitted and all the indicators will be turned off. The cooktop will go into standby mode and the digital display will show "**H**" until the temperature cooled below 140°F (60°C).

Cooking Mode

In ready mode, press **HEAT** (🔥) or **TEMP.** (🌡) to enter into heat or temp. cooking mode.

Heat Mode: Cook by setting power level.
In ready mode or temp. cooking mode, press **HEAT** (🔥) to switch to power level cooking (heat) mode. The **HEAT** (🔥) indicator will light up and the digital display shows "**900**" as default indicating the cooktop is in the power level setting mode. Press "**+**" or "**-**" to adjust to the desired power level.
Available Power Level Setting:

300W	500W	700W	900W	1100W	1300W	1500W

Temp. Mode: Cook by setting temperature level.
In ready mode or heat cooking mode, press **TEMP.** (🌡) to switch to temperature cooking (temp.) mode. The **TEMP.** (🌡) indicator will light up and the digital display shows "**260**" as default indicating the cooktop has entered in the temperature cooking mode. Press "**+**" or "**-**" to adjust to the desired temperature level.
Available Temperature Levels:

120°F	150°F	180°F	210°F	260°F	300°F	360°F	420°F	465°F

NOTE:

- The cooktop can be used continuously for 2 hours and then will shut off automatically. If using the integrated timer with either the Heat Mode or Temp. Mode function, the cooktop maximum time is 2 hours and 59 minutes and will shut off automatically.
- This cooktop is designed to prevent parching. When cooking in Heat Mode, it might shut off automatically while this cooktop is used for frying, stir-frying, grilling and other high temperature cooking situations.

Timer Setting

The timer setting function is only available when either the "**HEAT**" mode or the "**TEMP.**" mode is on. The timer setting ranges from 1 minute to 2 hours and 59 minutes. Use "**+**" or "**-**" key to set the timer. A short key press to set at 1-minute level and a long key press to set at 10-minute level.

1. In **HEAT** or **TEMP.** cooking mode, press the **TIMER** (⏲) to set timer. The timer indicator will blink and the digital display will show "**0:00**" with minute number blinking.
2. Press "**+**" or "**-**" to set the minute to desired level.
3. Press the **TIMER** (⏲), the hour number will blink. Press "+" or "-" to set the hour to desired level.
4. Press the **TIMER** (⏲) again to complete the timer setting.
   NOTE: The timer setting will be confirmed automatically after 10 seconds without any operation.

Once the timer is set, the digital display will show the remaining cooking time and cooking power/temperature alternatively every 5 seconds. When the count down ends, a "beep" sound will be emitted and the cooktop will be turned off automatically.
To cancel the timer, press **TIMER** (⏲), use the "**+**" or "**-**" to adjust the time to read "**0:00**". The timer indicator will blink for 10 seconds and then the digital display will return to power/temperature display.

Operational Cooktop Noises

When the cooktop is in use, the fan may be running to dissipate heat and emitting a soft-sounding cooling fan sound. What can sometimes produce sound with induction cooking is not the induction equipment but the cookware itself. Slight sounds may be produced by different types of cookware. Some of the possible causes include:

- Light weight cookware may vibrate and produce noise. Heavy weight quality cookware is recommended.
- Cookware with irregular or warped bottoms may produce noise while cooking caused by vibration.
- A "Cracking" noise may be heard if the cookware base is made of layer of different material.
- A low "humming" noise occurs when cooking, which is normal particularly at high power settings.
- Loose-fitting handles on cookware, typically when riveted on, can vibrate slightly.

Compatible Cookware

Proper Cookware

Flat-bottom pots or pans with diameter from 4¾" to 10⅞" (120 to 275mm) made from the following:

Iron Frying Pan	Stainless Steel Pot	Iron Pan	Iron Kettle
Enamel Stainless Steel Kettle	Enamel Cooking Pot	Iron Plate	

Optimally the cookware will have this induction image on the retail box.

Induction

Improper Cookware

Pots or pans with or made of the following CANNOT be used on your cooktop:

- Non-magnetic stainless steel
- Bottom measuring less than 4¾" (120mm)
- Pot with stands
- Heat resistant glass
- Ceramic container
- Copper
- Aluminum

If you are unsure about the usability of your cookware, simply take a magnet (such as one on your refrigerator) and hold it under the bottom of your pot or pan. If the magnet sticks, the cookware can be used on the induction cooktop.

Cleaning and Maintenance

Please follow these directions along with Important Safety steps for cleaning. Use a ceramic glass cleaner on the glass cooktop and follow these steps:

1. Before using the cooktop for the first time, clean the glass top .
2. Shake the cleaning solution well. Apply a few drops of ceramic glass cleaner directly to the cooktop.
3. Use ceramic glass cleaner when the cooktop is cool after each use, it will help keep the cooktop looking new.
4. Use a paper towel or a soft cleaning pad on the ceramic surface to clean the entire cooktop surface.
5. Use a dry cloth or paper towel to remove all cleaning residue. No need to rinse. Never run the cooktop under water.

Model and Serial Number Location

- The serial plate is located under the cooktop.
- When ordering parts or making inquiries about your cooktop, be sure to include the model and serial numbers.

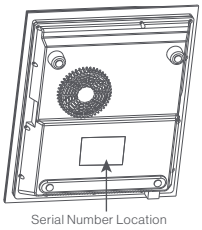
Serial Number Location

Hot Surface Indicator H

The cooking surface may remain hot for some time even after the cooktop has been turned off. An "H" will be shown in the LED display indicating that the surface is hot. Wait until the"H" has disappeared and then start the cleaning.

Cleaning Burned on Residue

⚠ WARNING

Damage to the glass surface may occur if you use scrub pads or any other type of abrasive cleaning materials.

NOTE: DO NOT use the cooktop until it has been thoroughly cleaned.

1. Allow the cooktop to cool.
2. Spread a few drops of the ceramic glass cleaner on the burned residue area.
3. Using the ceramic glass cleaning pad, rub the residue area, applying pressure as needed.
4. If any residue remains, repeat the steps listed above.
5. For additional protection, after all residue has been removed, polish the entire surface with the ceramic glass cleaner and a paper towel.

Cleaning Heavy Burned - on Residue

1. Allow the cooktop to cool.
2. Use a single-edge razor blade scraper approximately at a 45 degree angle against the glass surface and scrape off the residue. After scrapping off the residue, apply a few drops of the ceramic glass cleaner on the entire burned residue area. Use the cleaning pad to remove any remaining residue.
3. For additional protection, after all residue has been removed, polish the entire surface with the ceramic glass cleaner and a paper towel.

Metal Marks and Scratches

Be careful not to slide pots or pans across the cooktop surface. It will leave behind metal markings.
Use the ceramic glass cleaner along with the cleaning pad to remove these marks.
Any mark should be removed immediately to avoid permanent discoloration.
NOTE: If there are cracks or indentations on the glass surface, the cooktop glass will have to be replaced. Contact the manufacturer for assistance.

Troubleshooting

If the display shows following problems, please refer to this sheet for a potential solution.

Problems	Possible Cause	Solutions
Cooktop does not work.	• Cooktop controls are locked. • Power outage.	• Make sure Lock mode is turned off. • Check house lights to confirm power outage. • Contact manufacturer.
Cooktop does not heat.	• No cookware or Improper cookware placement on the induction heater areas. • Incorrect cookware size for the selected induction heater areas. • Cookware Is not properly resting on induction heater areas. • Incorrect induction heater areas selected. • No power to cooktop.	• Make sure that the cookware is centered on the induction heater areas, and that cookware is also of correct type for Induction cooking. See **Compatible Cookware** section. • The bottom of the cookware must be large enough to cover induction heater areas. • Cookware bottoms must be flat and centered on the induction heater areas. • Make sure the correct control is ON for the induction heater areas being used. • See "Cooktop does not work" above.
Cooktop turns off while cooking.	• Cooktop Internal heat sensor has detected high temperature inside the cooktop, activating automatic shut off. • Liquid or object on the controls area.	• Make sure the cooktop vents are not blocked. • The cooktop features an automatic shutoff feature that turns off the entire cooktop if any induction heater areas has been on continuously for 2 hours. The cooktop control panel may register liquids or objects obstructing the panel, which can cause the cooktop to shut off. Clean up spills or remove objects and restart the cooktop.
The fans keep running for one minute after the cooktop has been turned off.	• The electronics are cooling down.	• This is a normal occurrence.

Error Code

If the digital display shows an error code, please refer to this sheet for a potential solution.

Error Code	Solutions
U	Cookware Sensor Detection: • No cookware is detected on the cooking zone after 10 seconds. Make sure the material of the cookware is cooktop compatible and it is centered on the cooking zone.
E0, E6	Overheat Protection: • Turn off cooktop to allow the cooktop to cool. Then restart cooktop. • Check to ensure the cookware has contents in the pan. • Check the venting in the cooktop and or cabinet to ensure they are not blocked.
E2	Incorrect Voltage Sensor: • If the voltage of the power supplied to the cooktop is too low, it cannot operate properly and will show this error code. This may be caused by reduced voltage being supplied to the house circuit. If connections are correct and the supplied voltage returns to normal, the code will disappear.
E3	Incorrect Voltage Sensor: • If the voltage of the power supplied to the cooktop is too high, It cannot operate properly and will show this error code. This may be caused by increased voltage being supplied to the house circuit. If the connections are correct and the supplied voltage returns to normal, the code will disappear.
E7, E8, E9, EE	• An internal fault has been detected. To reset the cooktop, turn the cooktop off and unplug the cooktop from the electrical outlet or turn off the circuit breaker for 30 seconds. Reconnect power and turn the cooktop back on. If the error message is still being displayed, call for service.

Specifications

Specifications	
Voltage (Volts)	120V
Frequency (Hz)	60Hz
Total Power (Watts)	1500W
Minimum Circuit Breaker Amperage	15A

The contents of this manual are proprietary and copyright protected by Lippert. Lippert prohibits the copying or dissemination of portions of this manual unless prior written consent for an authorized Lippert representation has been provided. Any unauthorized use shall void any applicable warranty. The information contained in this manual is subject to change without notice and at the sole discretion of Lippert. Revised editions are available for free download from lippert.com.

Please recycle all obsolete materials.

For all concerns or questions, please contact Lippert
PhL 432-LIPPERT (432-547-7378) | Web: lippert.com | E-mail: customerservice@lci1.com

CCD-0005585 | REV DATE: 10.14.2022

IM-FHA0018 V5.0