

ABS Brake Repair

Installation Manual

(For Aftermarket Applications)

Table of Contents

Introduction 2
Safety 2
ABS Hub Exploded View 3
Resources Required 4
Prior to Installation 4
Hub Removal 4
Brake Assembly Replacement 6
Hub Replacement 7
ABS Sensor and Shim Installation 8
Reinstalling the Wheel 12
Wheels 13
Wheel Selection 13
Torque Requirements 13
Tires 14

ABS Brake Repair
Installation Manual
(For Aftermarket Applications)

Introduction

The basic structure of the Electric Brakes on your coach will resemble the brakes on your car or tow vehicle, with one major difference: your coach implements an electric actuation system and your tow vehicle utilizes a hydraulic system.

NOTE: Images used in this document are for reference only when assembling, installing and/or operating this product. Actual appearance of provided and/or purchased parts and assemblies may differ.

Additional information about this product can be obtained from lci1.com/support or by using the LippertNOW app. Replacement kits can be ordered from https://store.lci1.com/ or by using the LippertNOW app.

The LippertNOW app is available for free on Apple App Store® for iPhone® and iPad® and also on Google Play™ for Android™ users.

App Store® and iPad® are registered trademarks of Apple Inc.
Google Play™ and Android™ are trademarks of Google Inc.

For additional support on this product, scan this QR code or go to: https://support.lci1.com/anti-lock-system-abs or https://support.lci1.com/braking-system

ABS

Braking System

Safety

Read and understand all instructions before installing or operating this product. Adhere to all safety labels.
This manual provides general instructions. Many variables can change the circumstances of the instructions, i.e., the degree of difficulty, operation and ability of the individual performing the instructions. This manual cannot begin to plot out instructions for every possibility, but provides the general instructions, as necessary, for effectively interfacing with the device, product or system. Failure to correctly follow the provided instructions may result in death, serious personal injury, severe product and/or property damage, including voiding of the Lippert limited warranty.

⚠ WARNING

THE "WARNING" SYMBOL ABOVE IS A SIGN THAT A PROCEDURE HAS A SAFETY RISK INVOLVED AND MAY CAUSE DEATH OR SERIOUS PERSONAL INJURY IF NOT PERFORMED SAFELY AND WITHIN THE PARAMETERS SET FORTH IN THIS MANUAL.

⚠ CAUTION

THE "CAUTION" SYMBOL ABOVE IS A SIGN THAT A SAFETY RISK IS INVOLVED AND MAY CAUSE PERSONAL INJURY AND/OR PRODUCT OR PROPERTY DAMAGE IF NOT SAFELY ADHERED TO AND WITHIN THE PARAMETERS SET FORTH IN THIS MANUAL.

ABS Brake Repair
Installation Manual
(For Aftermarket Applications)

ABS Hub Exploded View

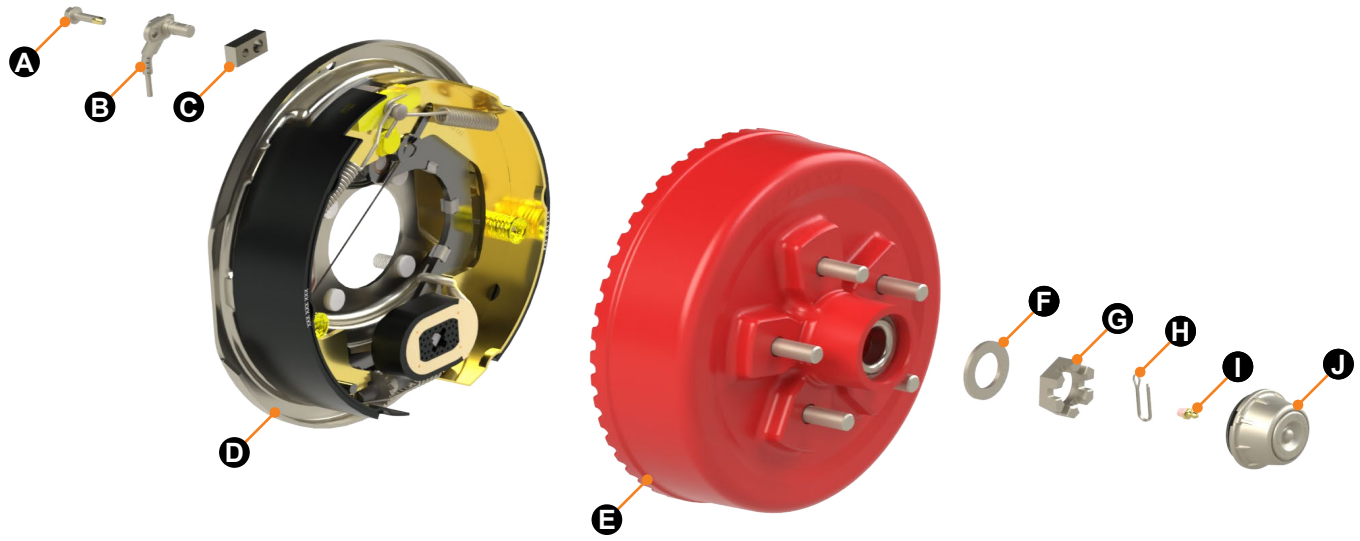

CALLOUT	DESCRIPTION	QTY
STANDARD WHEEL END PARTS		
A	Screw, Self-threading	1
B	Sensor	1
C	Shim	3
D	ABS Brake	1
E	Hub Drum with Studs	1
F	Spindle Washer, Round	1
G	Castle Spindle Nut	1
H	Cotter Pin	1
I	Grease Zerk, Lubed	1
J	Dust Cap	1

NOTE: Image is shown for general part identification purposes only. Other Brake Hub assemblies may have parts that differ from this image.

ABS Brake Repair
Installation Manual
(For Aftermarket Applications)

Resources Required

- Torque wrench (ft-lb)
- Assorted deep well sockets
- Ratchet wrench
- Floor jacks
- Floor jack stands
- Rubber mallet
- Screwdriver or prybar
- Pliers
- Shop towels or rags
- Appropriate Personal Protective Equipment (PPE)

Prior to Installation

Before beginning the installation process, ensure that the correct replacement parts have been purchased and all parts are present.

Hub Removal

1. Lift and support coach per manufacturer's requirements.

⚠WARNING

LIFT UNIT BY THE FRAME AND NEVER BY THE AXLE OR SUSPENSION. DO NOT GO UNDER UNIT UNLESS IT IS PROPERLY SUPPORTED BY JACK STANDS. UNSUPPORTED UNITS CAN FALL CAUSING DEATH OR SERIOUS INJURY.

2. Remove the lug nuts from the wheel and set aside **(Fig. 1)**.

3. Remove the wheel from the axle hub and set aside **(Fig. 2)**.

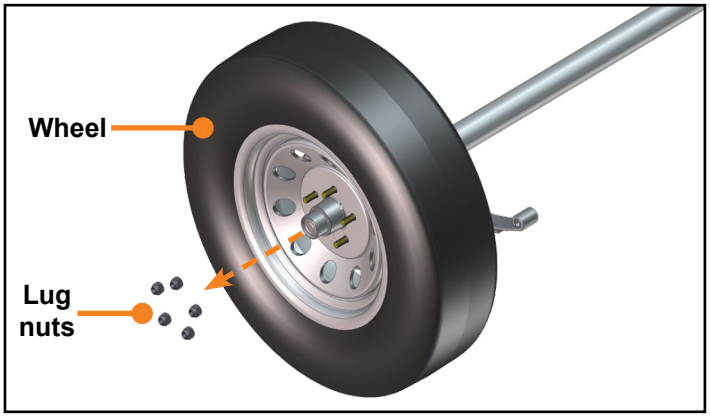

Fig.1

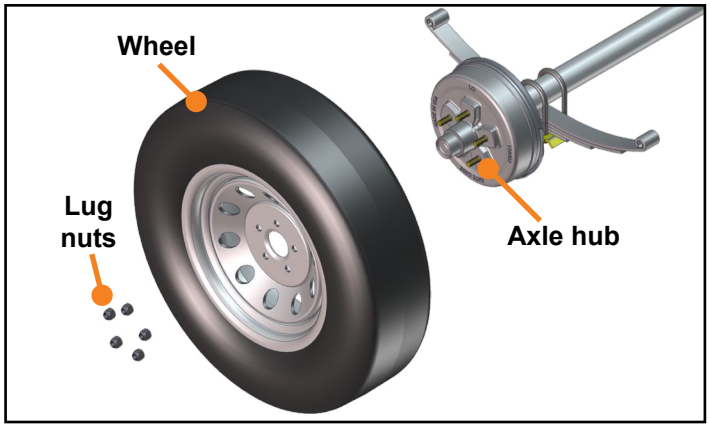

Fig.2

4. Remove the dust cap by prying the edge out of the hub with a screwdriver or prybar **(Fig. 3)**.

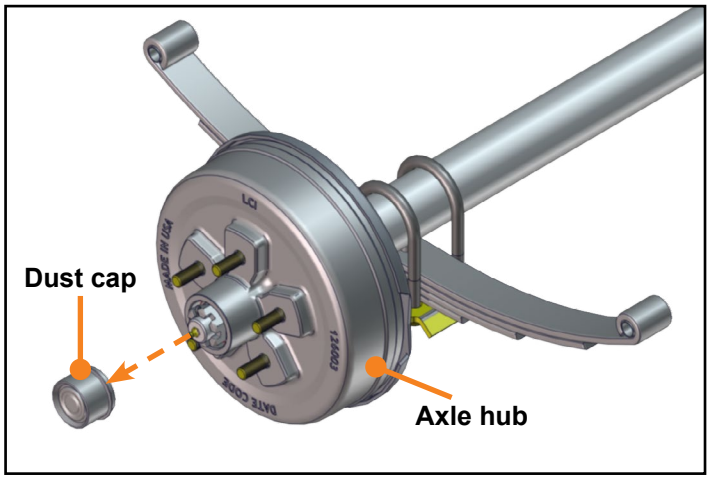

Fig.3

5. Using a pair of pliers, pull the cotter pin from the spindle nut and discard the cotter pin **(Fig. 4)**.

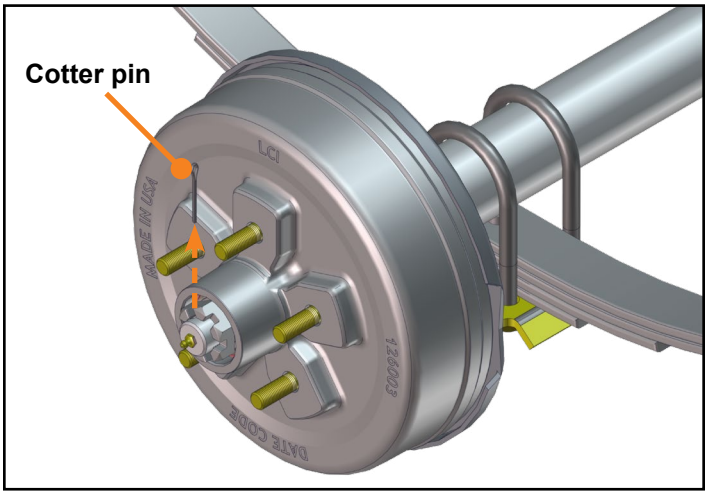

Fig.4

6. Using a socket and ratchet, remove the spindle nut from the spindle **(Fig. 5)**.

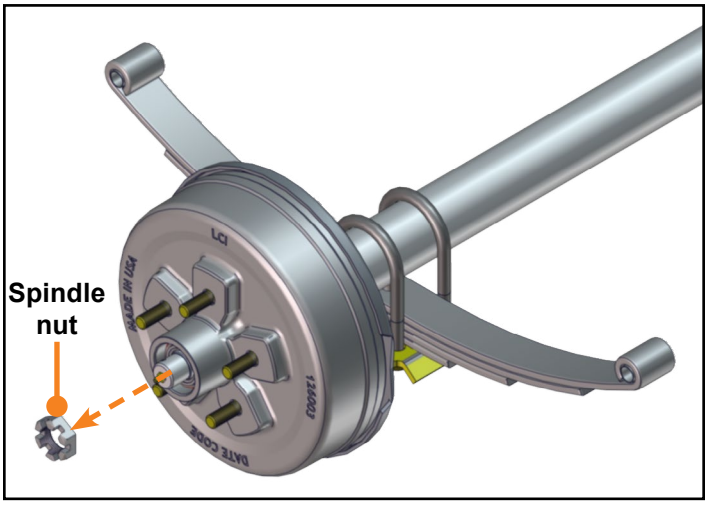

Fig.5

7. Remove the spindle washer from the spindle **(Fig. 6)**.

8. Place hand over nose of hub during removal to contain outer bearing lug or remove outer bearing cone prior to removal of hub. Remove the hub from the spindle **(Fig. 7)**.

NOTE: Brakes may need to be adjusted or backed off to remove hub from spindle.

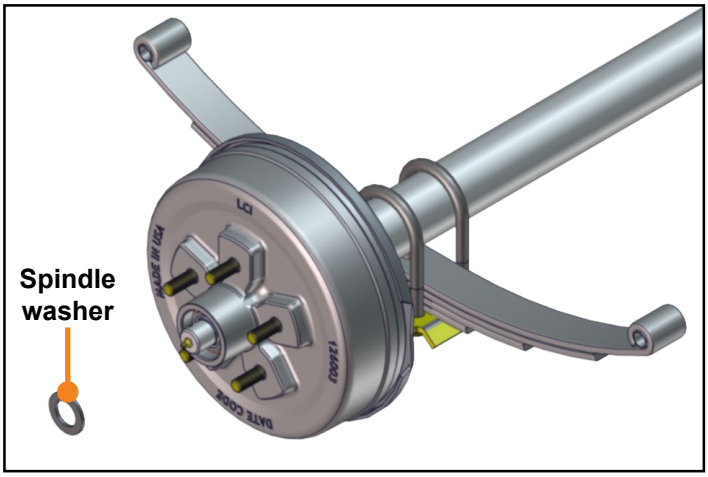

Fig.6

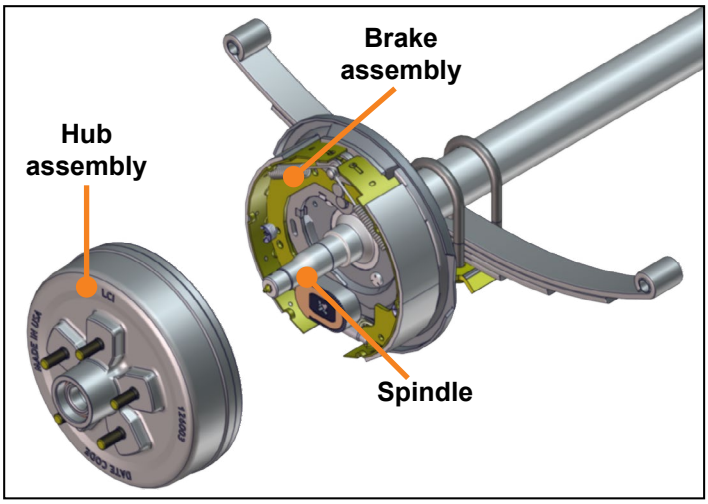

Fig.7

Brake Assembly Replacement

1. Disconnect the wires leading from the axle to the brake assembly **(Fig. 8)**.

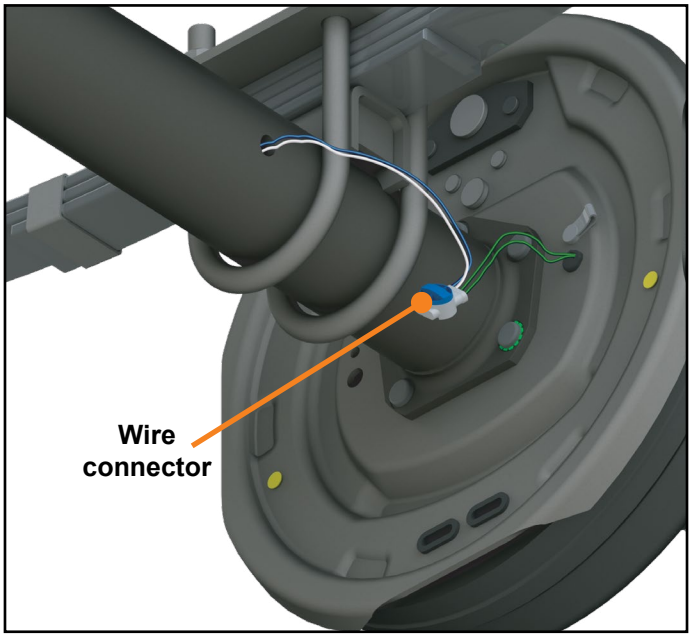

Fig.8

2. Remove the wheel speed sensor screw and detatch the wheel speed sensor from the brake assembly **(Fig. 9)**.

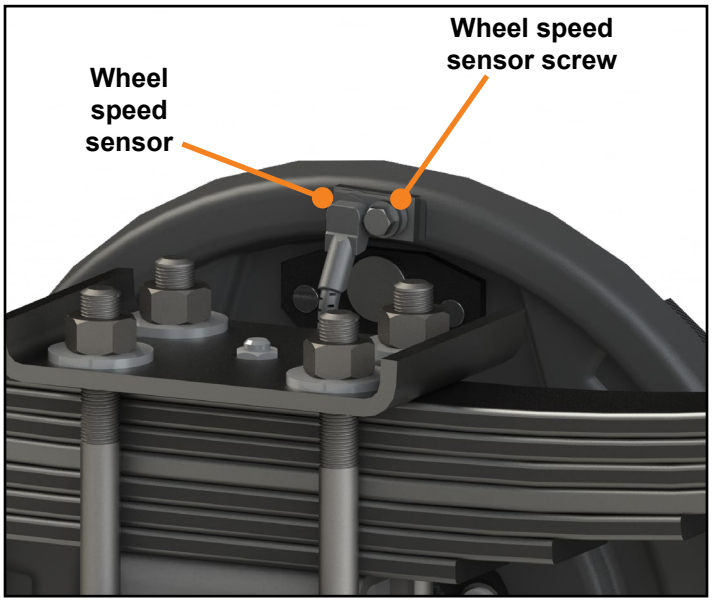

Fig.9

3. Remove the nuts fastening the brake assembly to the spindle, then remove the brake assembly **(Fig. 10)**.

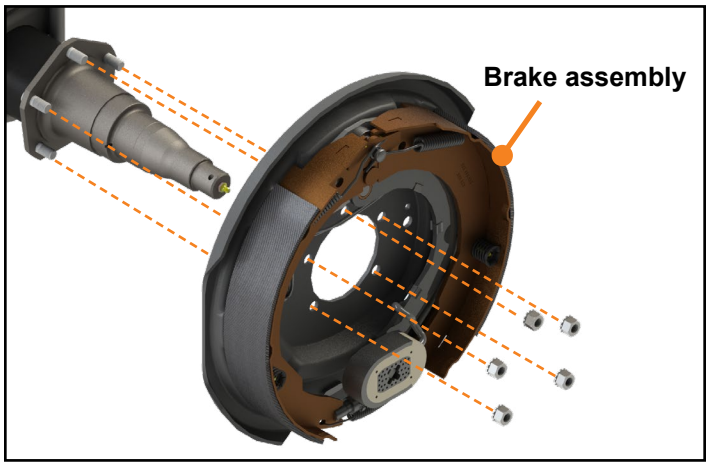

Fig.10

4. Clean excess grease from spindle.

5. Slide the new brake assembly onto the spindle, and fasten it with the washers and nuts,

A. Torque the nuts to 35-55 ft-lb for 2K-7K axles.

B. Torque the nuts to 55-80 ft-lb for 8K-16K axles.

Hub Replacement

1. Place hub assembly onto the axle spindle followed by the spindle washer and spindle nut **(Fig. 11)**. Spindle nut should be torqued to 50 ft.-lb. Rotate the hub during the tightening process.

2. Loosen spindle nut to back off the torque.

3. Tighten spindle nut finger tight until snug.

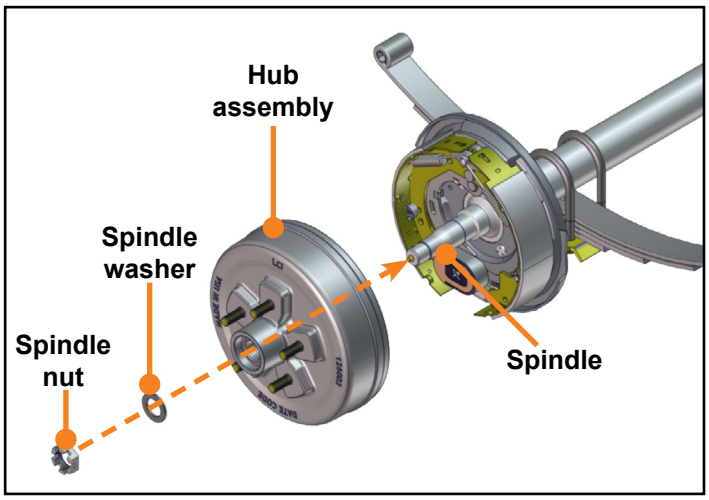

Fig.11

4. Insert ***NEW*** cotter pin **(Fig. 12)**. If cotter pin does not line up with hole, loosen spindle nut slightly until pin can be inserted.

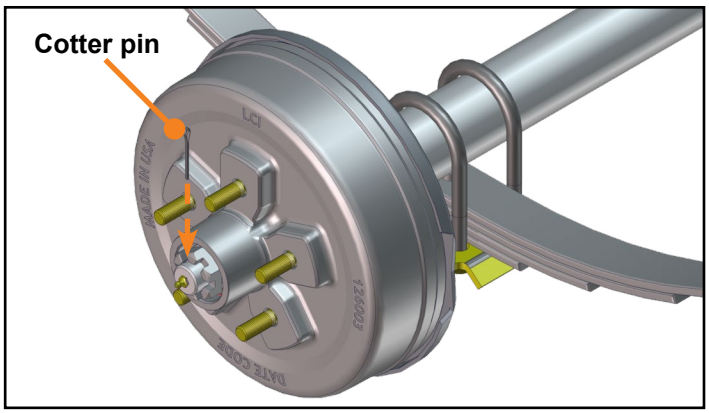

Fig.12

5. Using pliers, bend the cotter pin over to lock nut in place **(Fig. 13)**. Nut should be free to move with only the cotter pin keeping it in place.

6. Re-install dust cap into the hub assembly using a rubber mallet to properly seat it to the hub face **(Fig. 14)**.

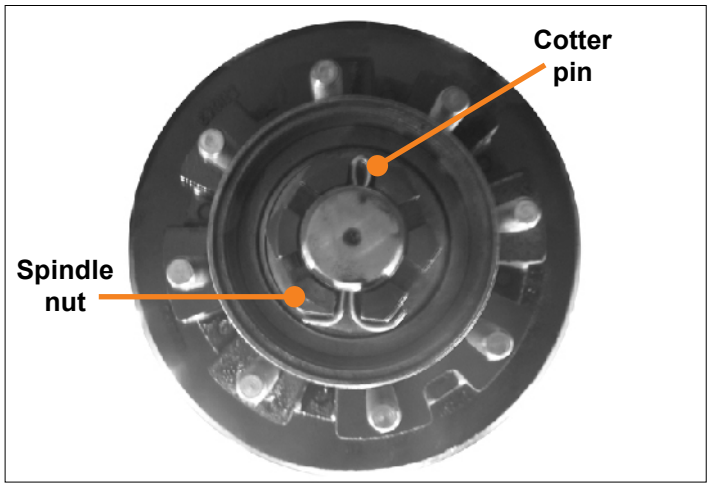

Fig.13

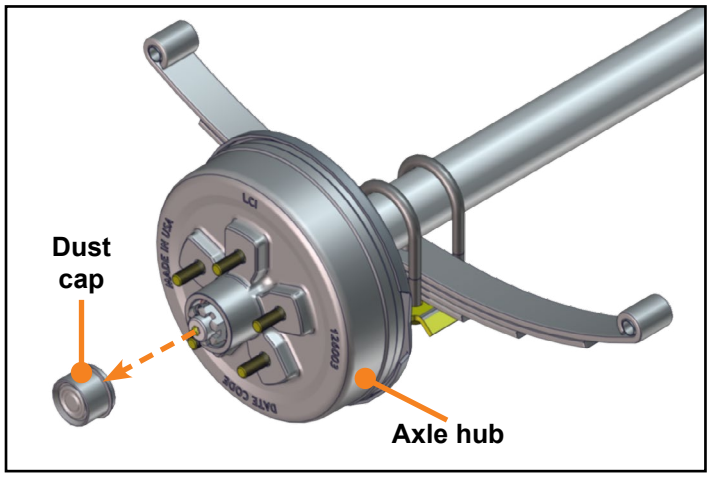

Fig.14

ABS Sensor and Shim Installation

1. Install the ABS sensor **(Fig. 15A)** onto the top of the backside of the back plate with the new, silver-colored sensor shim **(Fig. 15B)**. Set the mounting bolt **(Fig. 15C)** torque to 5 ft-lb.

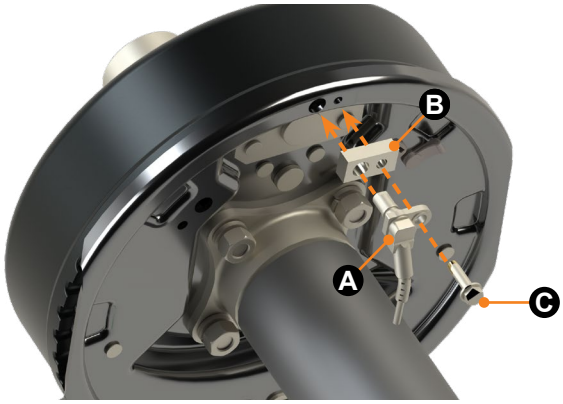

Fig.15

2. Using painter's tape or another method of non-permanent marking, mark each of the cardinal directions (North, East, South, West) on the face of the hub for reference **(Fig. 16)**. When checking the air gap between the sensor and the hub in the following steps, checks should be made at each of these cardinal direction markers. If the spacing between the sensor and hub is not consistent at each location, this indicates that the hub is warped and must be replaced.

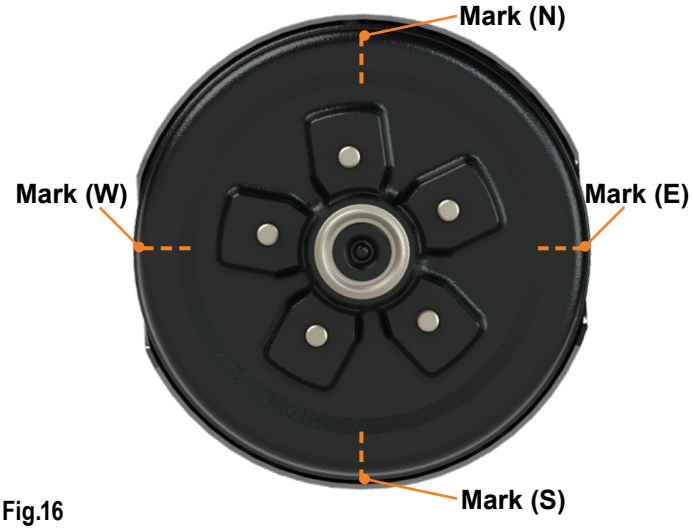

Fig.16

3. Locate the relief on either side of the backing plate where the tone ring of the hub is visible **(Fig. 17)**.

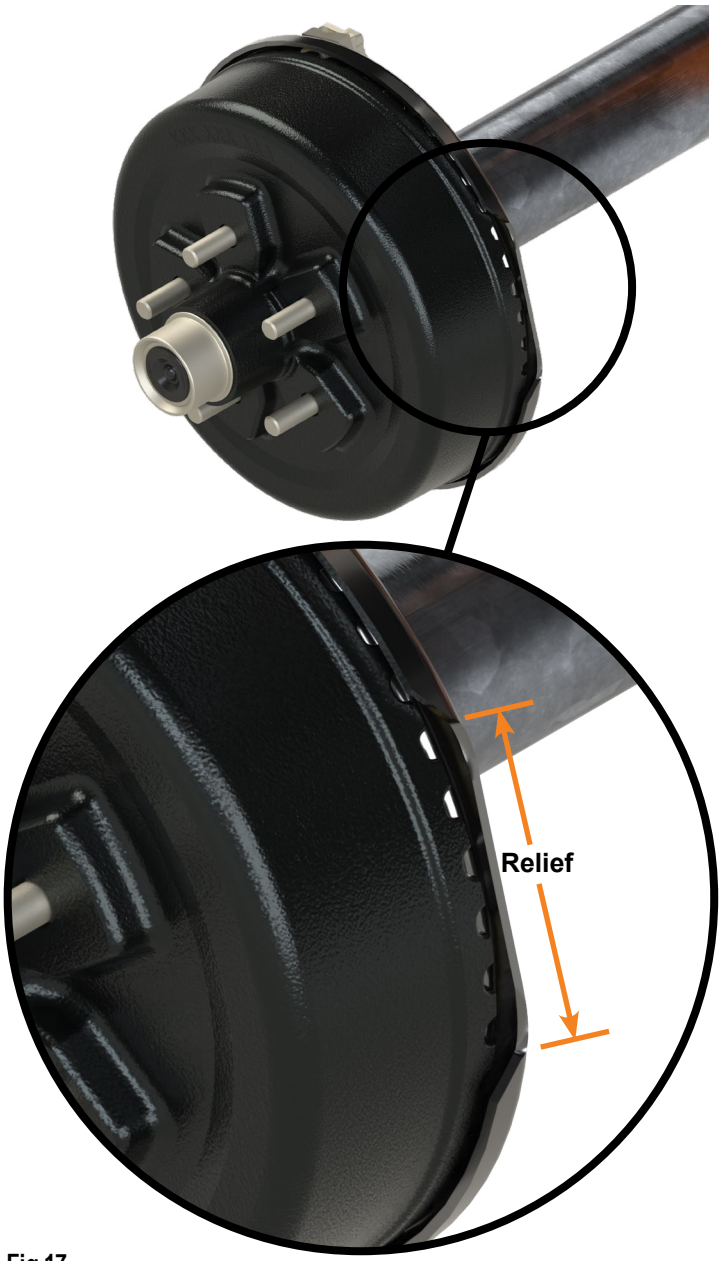

Fig.17

1. Slide the tab of the Go/NoGo gauge (Lippert part number 2026075853 for 10” brakes, or part number 2026075854 for 12” brakes) **(Fig. 18A)** into a valley of the tone ring that roughly aligns with one of the marks at the cardinal directions (East, for instance). The tab should fully insert into the valley until the handle of the gauge is flush with the side of the hub **(Fig. 19)**.

NOTE: Gauge is shown in green for visibility. Actual gauge color may vary.

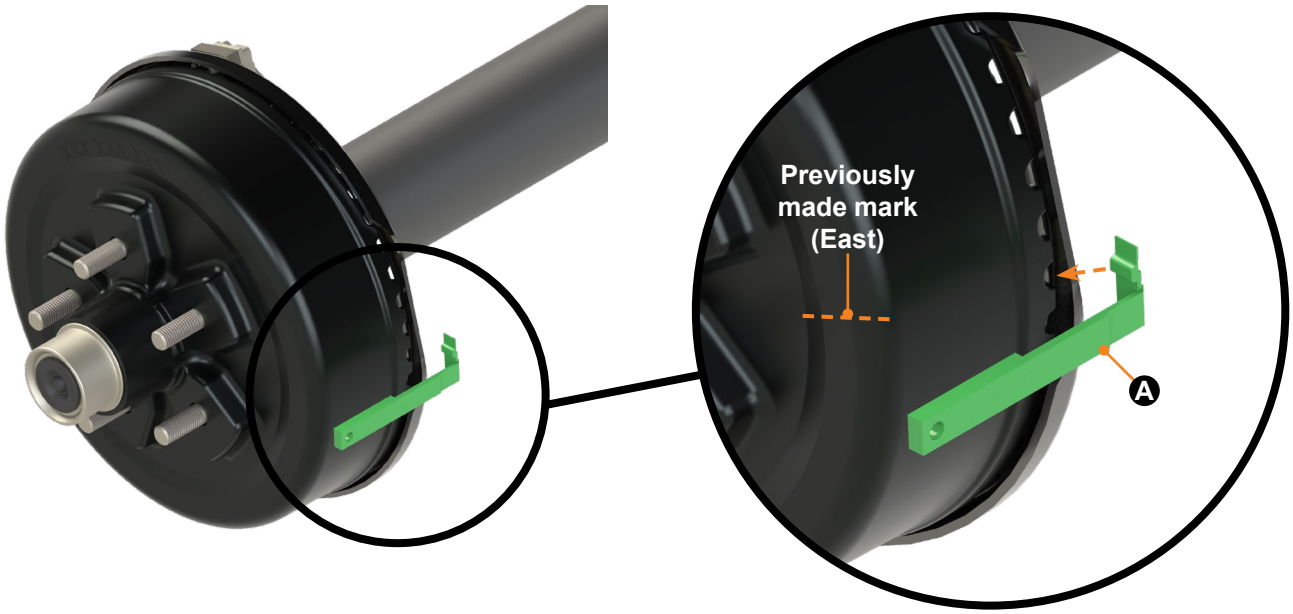

Fig.18

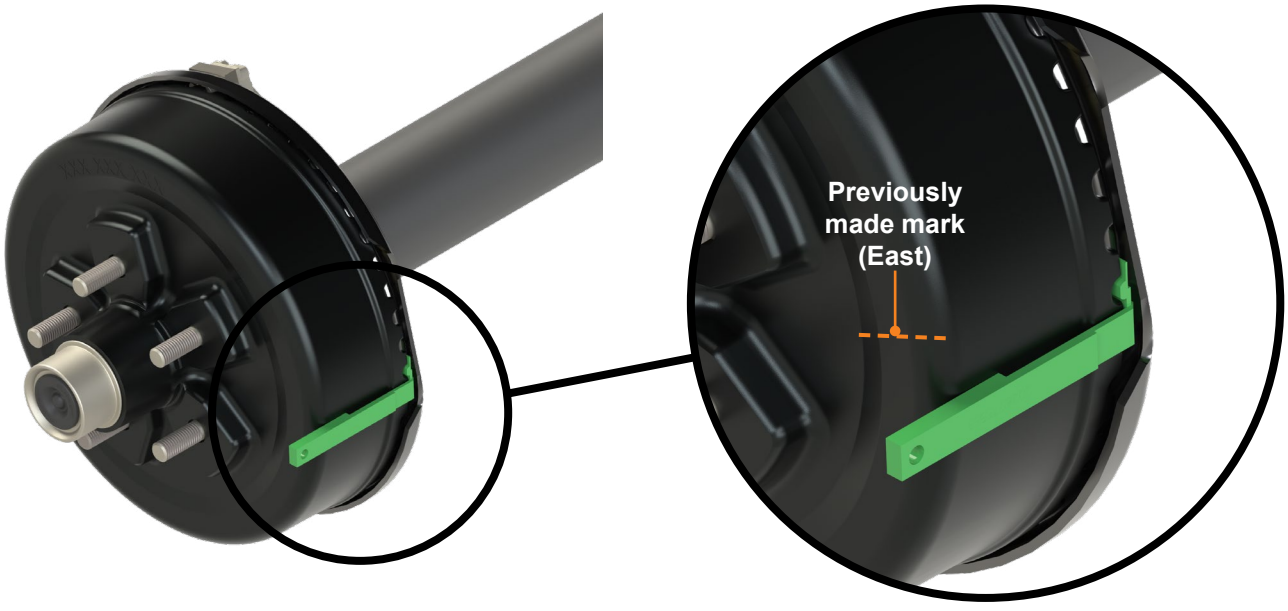

Fig.19

1. Carefully rotate the hub and gauge until the gauge reaches the sensor **(Fig. 20)**. **DO NOT** spin the hub quickly or the sensor/gauge may become damaged.



Fig.20

2. Once the gauge has reached the sensor, check the gap between the ABS sensor face and the tone ring **(Fig. 21)**. The air gap must be between 1mm and 1.75mm. This allows the sensor to fit onto the first “step” of the gauge comfortably while not going onto the second “step” of or bypassing the gauge entirely.

A. If the air gap falls within the 1mm and 1.75mm tolerance, continue to the next step of the procedure. See Figure 21 for correct sensor/tone ring spacing with the gauge.

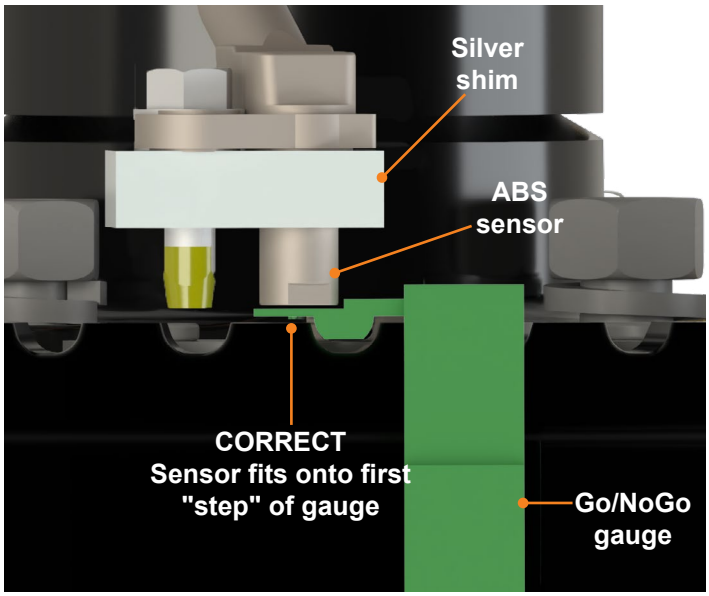

Fig.21

A. If the air gap is **less** than 1mm and/or the sensor can not fit onto the first “step” of the gauge **(Fig. 23)**, remove the sensor and silver shim. Reinstall the sensor onto the back plate, this time using the large yellow-colored shim. Set the mounting bolt torque to 5 ft-lb.

I. Perform the check again with the new shim using the Go/No Go gauge. If the air gap is now in tolerance, move on to the next step of this procedure.

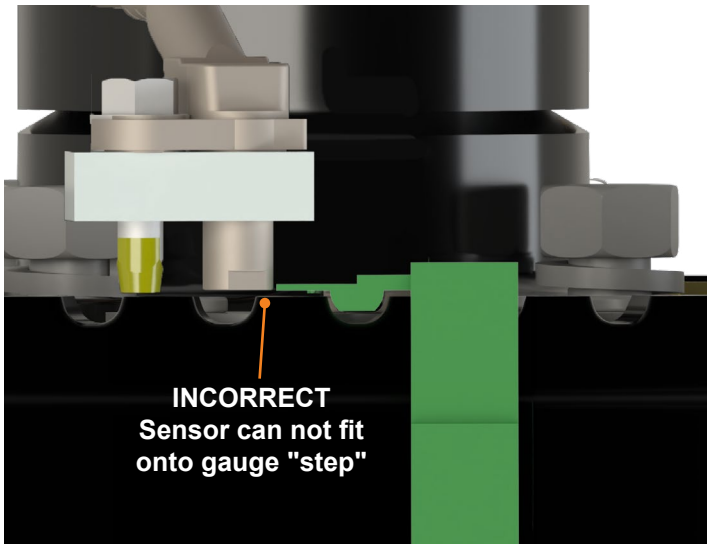

Fig.23

B. If the air gap is **greater** than 1.75mm and/or the sensor fits on top of the second “step” of the gauge/passes over the entire gauge **(Fig. 22)**, remove the sensor and silver shim. Reinstall the sensor onto the back plate, this time using the small black-colored shim. Set the mounting bolt torque to 5 ft-lb.

I. Perform the check again with the new shim using the Go/No Go gauge. If the air gap is now in tolerance, move on to the next step of this procedure.

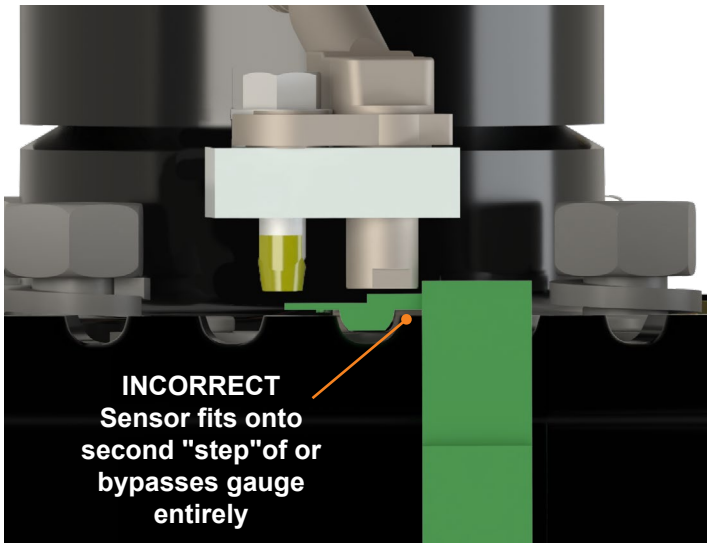

Fig.22

1. Once verifying the air gap is correct (or correcting if it isn't by replacing with another shim and re-checking with the gauge, etc.) at this cardinal point previously marked on the hub face (East in this example), remove the Go/No Go Gauge and spin the hub face to the next cardinal mark on the hub face (South) and repeat this process. Then, repeat with each remaining cardinal point on the hub face (West, North) with the Go/No Go gauge at the sensor to ensure that the sensor air gap falls within tolerance at all four cardinal points on the hub/tone ring using the appropriate shims at each location.

2. Plug the ABS hub sensor into the harness **(Fig. 24A)**.

3. Connect the brake wires using sealed wire connectors **(Fig. 24B)**.

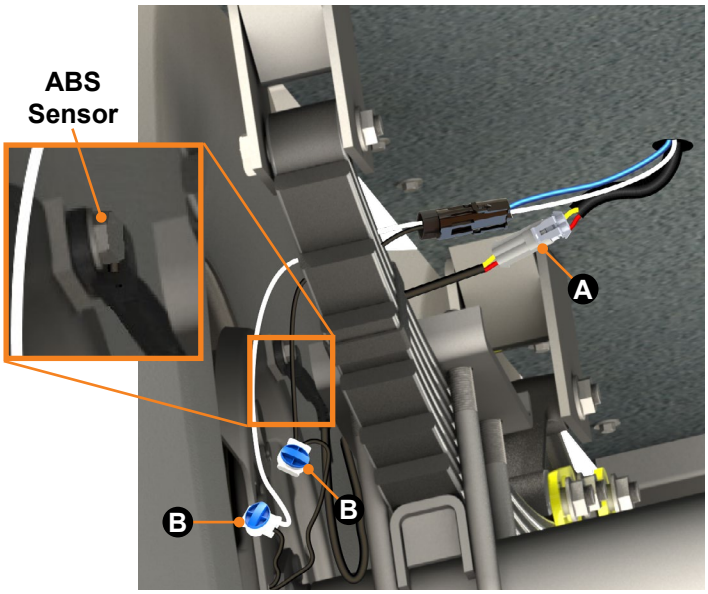

Fig.24

Reinstalling the Wheel

1. Reinstall the wheel onto the axle hub assembly **(Fig. 25)**. Continue to the "Wheels" section in this manual for wheel torque specifications.

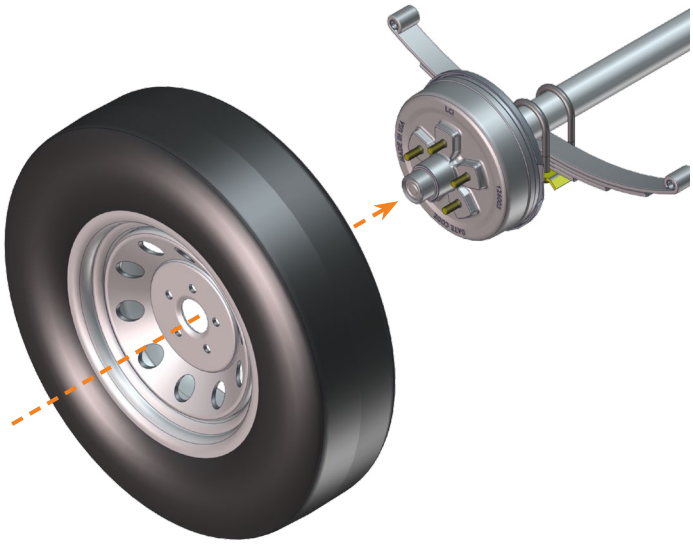

Fig.25

Wheels

Wheel Selection

⚠ WARNING

AIR PRESSURE ON A WEAKENED OR CRACKED RIM CAN CREATE AN UNSAFE, EXPLOSIVE CONDITION RESULTING IN SERIOUS PERSONAL INJURY OR DEATH. DO NOT ATTEMPT TO MODIFY OR REPAIR A WHEEL. REPLACE DAMAGED OR WEAKENED WHEEL AND RIM WITH NEW PARTS.

⚠ WARNING

USE MANUFACTURER'S SUGGESTED RIM CONTOURS ONLY. FAILURE TO USE RECOMMENDED RIM CONTOURS MAY RESULT IN DRAMATIC SEPARATION BETWEEN TIRE AND WHEEL, RESULTING IN POSSIBLE SERIOUS PERSONAL INJURY OR DEATH.

Trailer wheels, tires and axles **MUST** be properly matched when specifying or replacing trailer wheels. Make sure the following critical wheel replacement characteristics are observed:

1. Bolt Circle — Wheels have varying bolt circle patterns, some close enough to allow installation of mismatched wheel bolt patterns to axle hub bolt patterns.

2. Capacity — Wheel load capacity must match tire and trailer maximum load ratings.

3. Offset — The relationship of the tire's centerline to the axle's hub face must match across replacement parts. Failure to match offset reduces axle carrying capacity.

4. Rim Contour — Replacement wheels must directly match the mating rim contour.

Torque Requirements

It is extremely important to maintain proper wheel mounting torque limits on your trailer axle. Use of torque wrenches will ensure proper torque limits are applied to wheel mounting lug nuts. Use no other method to torque wheel lug nuts.

Make sure wheel fasteners match the cone angle of the wheel (usually 60 or 90 degrees) being serviced. Attach new wheel to the axle hub as follows:

1. Start all bolts or nuts by hand to prevent cross threading.

2. Continue to hand-tighten wheel lug nuts in the sequential pattern shown below.

3. After wheel lug nuts are fully hand-tightened, torque nuts in stages in the sequential pattern shown below.

4. Torque wheel lug nuts to the torque values listed in the Wheel Torque Requirement Chart.

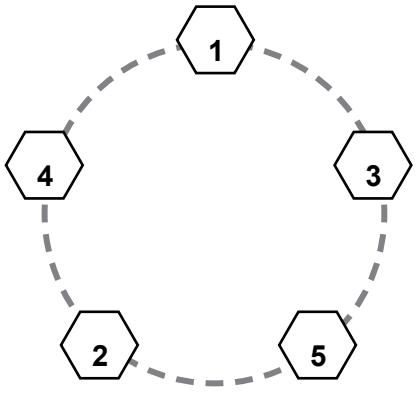

5 Lug

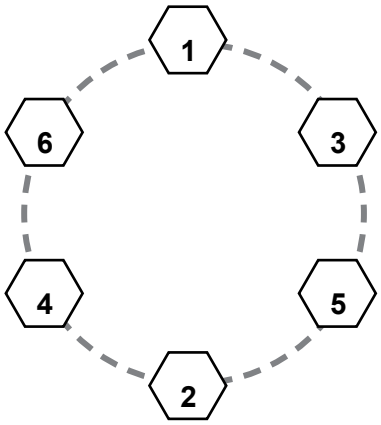

6 Lug

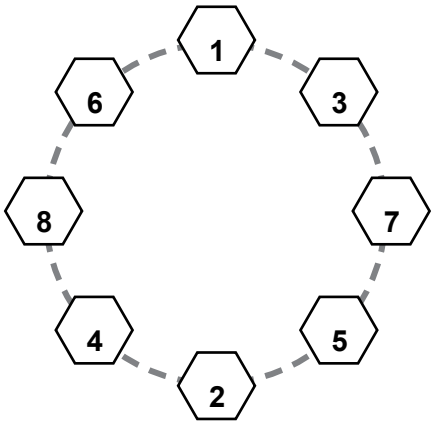

8 Lug

Wheel Torque Requirements Chart				
Wheel Size	Stud Size	Torque Sequence		
		1st Stage	2nd Stage	3rd Stage
14”	½”	20-25 ft-lbs (27-34 Nm)	50-60 ft-lbs (68-81 Nm)	90-120 ft-lbs (122-163 Nm)
15”	½”	20-25 ft-lbs (27-34 Nm)	50-60 ft-lbs (68-81 Nm)	90-120 ft-lbs (122-163 Nm)
16”	½”	20-25 ft-lbs (27-34 Nm)	50-60 ft-lbs (68-81 Nm)	90-120 ft-lbs (122-163 Nm)
16.5”	½”	20-25 ft-lbs (27-34 Nm)	50-60 ft-lbs (68-81 Nm)	90-120 ft-lbs (122-163 Nm)
14.5” Demount	½”	Tighten sequentially to 85-95 ft-lbs (115-129 Nm)		
16”	9/16”	20-25 ft-lbs (27-34 Nm)	60-70 ft-lbs (81-95 Nm)	120-140 ft-lbs (163-190 Nm)
16.5”	9/16”	20-25 ft-lbs (27-34 Nm)	60-70 ft-lbs (81-95 Nm)	120-140 ft-lbs (163-190 Nm)
16” Dual and 17.5” 2 pc. Swivel Flange Nut	5/8”	30-40 ft-lbs (41-54 Nm)	80-90 ft-lbs (109-122 Nm)	150-175 ft-lbs (203-237 Nm)
16” Dual and 17.5” Flange Nut	5/8”	50-60 ft-lbs (68-81 Nm)	150-200 ft-lbs (203-271 Nm)	275-325 ft-lbs (373-441 Nm)
17.5” Dual Flange Nut	M22	50-100 ft-lbs (68-136 Nm)	250-300 ft-lbs (339-407 Nm)	450-500 ft-lbs (610-678 Nm)

Tires

Prior to mounting tires onto wheels, do as follows:

1. Make sure rim size and contour are approved by the Tire and Rim Association Yearbook or the tire manufacturer's catalog.

2. Verify tire load rating. If the load is not evenly distributed across all tires, use the tire rated for the heaviest wheel position.

3. Consult the Rubber Manufacturers Association or the tire manufacturer's guidelines for wheel mounting procedures.

Manual information may be distributed as a complete document only, unless Lippert provides explicit consent to distribute individual parts.

All manual information is subject to change without notice. Revised editions will be available for free download at lippert.com. Manual information is considered factual until made obsolete by a revised version.

Please recycle all obsolete materials and contact Lippert with concerns or questions.