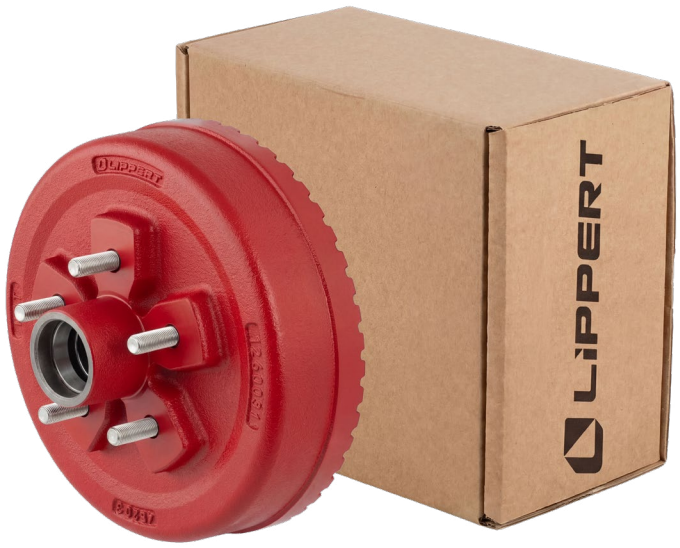

ABS Hubs

Installation Manual

(For Aftermarket Applications)

Table of Contents

Introduction 2
Safety 2
ABS Hub Exploded View 3
Resources Required 4
Prior to Installation 4
Hub Removal 4
Brake Adjustment 6
Hub Replacement 7
Wheel Torque Requirements 8
Notes 10

ABS Hubs
Installation Manual
(For Aftermarket Applications)

Introduction

The basic structure of the Electric Brakes on your RV will resemble the brakes on your car or tow vehicle, with one major difference: your RV implements an electric actuation system and your tow vehicle utilizes a hydraulic system.

NOTE: Images used in this document are for reference only when assembling, installing and/or operating this product. Actual appearance of provided and/or purchased parts and assemblies may differ.

Additional information about this product can be obtained from lci1.com/support or by using the LippertNOW app. Replacement kits can be ordered from https://store.lci1.com/ or by using the LippertNOW app.

The LippertNOW app is available for free on Apple App Store® for iPhone® and iPad® and also on Google Play™ for Android™ users.

App Store® and iPad® are registered trademarks of Apple Inc.
Google Play™ and Android™ are trademarks of Google Inc.

For additional support on this product, scan a QR code or go to: https://support.lci1.com/anti-lock-system-abs or https://support.lci1.com/hub-drum

ABS

Hubs-Drums

Safety

Read and understand all instructions before installing or operating this product. Adhere to all safety labels.
This manual provides general instructions. Many variables can change the circumstances of the instructions, i.e., the degree of difficulty, operation and ability of the individual performing the instructions. This manual cannot begin to plot out instructions for every possibility, but provides the general instructions, as necessary, for effectively interfacing with the device, product or system. Failure to correctly follow the provided instructions may result in death, serious personal injury, severe product and/or property damage, including voiding of the Lippert limited warranty.

⚠ WARNING

THE "WARNING" SYMBOL ABOVE IS A SIGN THAT A PROCEDURE HAS A SAFETY RISK INVOLVED AND MAY CAUSE DEATH OR SERIOUS PERSONAL INJURY IF NOT PERFORMED SAFELY AND WITHIN THE PARAMETERS SET FORTH IN THIS MANUAL.

⚠ CAUTION

THE "CAUTION" SYMBOL ABOVE IS A SIGN THAT A SAFETY RISK IS INVOLVED AND MAY CAUSE PERSONAL INJURY AND/OR PRODUCT OR PROPERTY DAMAGE IF NOT SAFELY ADHERED TO AND WITHIN THE PARAMETERS SET FORTH IN THIS MANUAL.

ABS Hubs
Installation Manual
(For Aftermarket Applications)

ABS Hub Exploded View

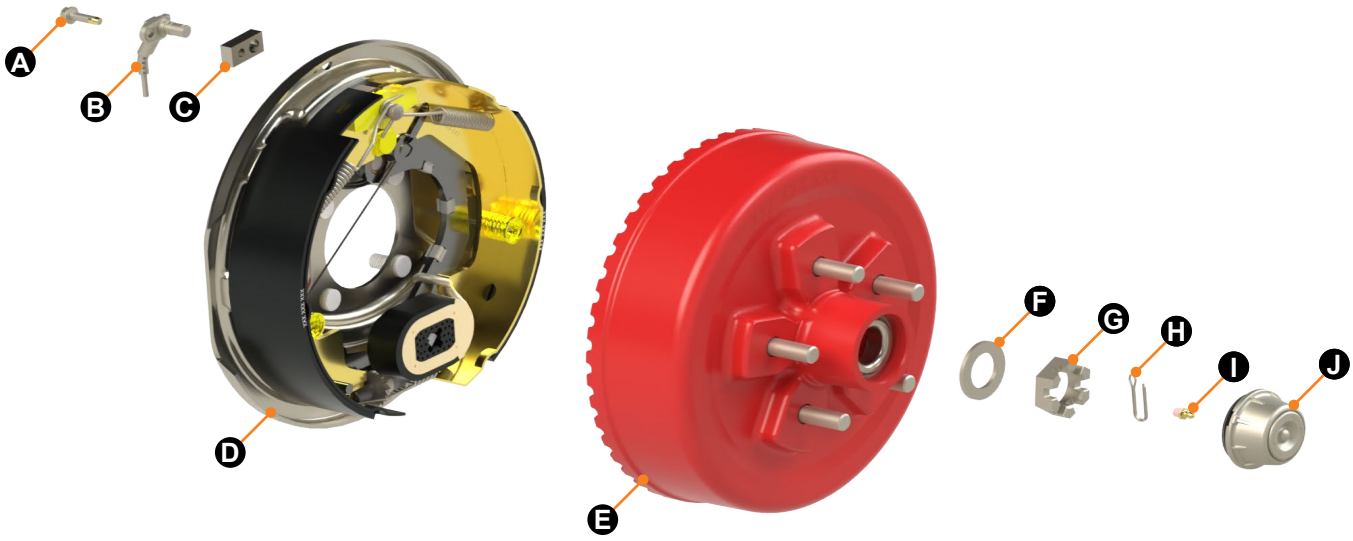

CALLOUT	DESCRIPTION	QTY
STANDARD WHEEL END PARTS		
A	Screw, Self-threading	1
B	Sensor	1
C	Shim	3
D	ABS Brake	1
E	Hub Drum with Studs	1
F	Spindle Washer, Round	1
G	Castle Spindle Nut	1
H	Cotter Pin	1
I	Grease Zerk, Lubed	1
J	Dust Cap	1

NOTE: Image is shown for general part identification purposes only. Other Brake Hub assemblies may have parts that differ from this image.

ABS Hubs
Installation Manual
(For Aftermarket Applications)

Resources Required

- Torque wrench (ft-lb)
- Assorted deep well sockets
- Ratchet wrench
- Floor jacks
- Floor jack stands
- Rubber mallet
- Screwdriver or prybar
- Pliers
- Shop towels or rags
- Appropriate Personal Protective Equipment (PPE)

Prior to Installation

Before beginning the installation process, ensure that the correct replacement parts have been purchased and all parts are present.

Hub Removal

1. Lift and support RV per manufacturer's requirements.

⚠WARNING

LIFT UNIT BY THE FRAME AND NEVER BY THE AXLE OR SUSPENSION. DO NOT GO UNDER UNIT UNLESS IT IS PROPERLY SUPPORTED BY JACK STANDS. UNSUPPORTED UNITS CAN FALL CAUSING DEATH OR SERIOUS INJURY.

2. Remove the lug nuts from the wheel and set aside **(Fig. 1)**.

3. Remove the wheel from the axle hub and set aside **(Fig. 2)**.

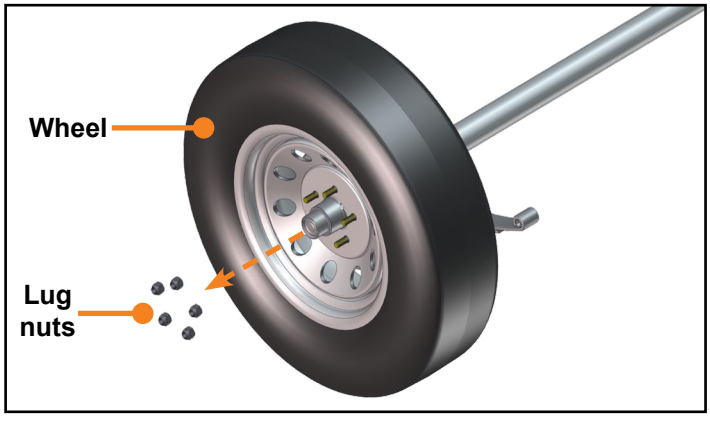

Fig.1

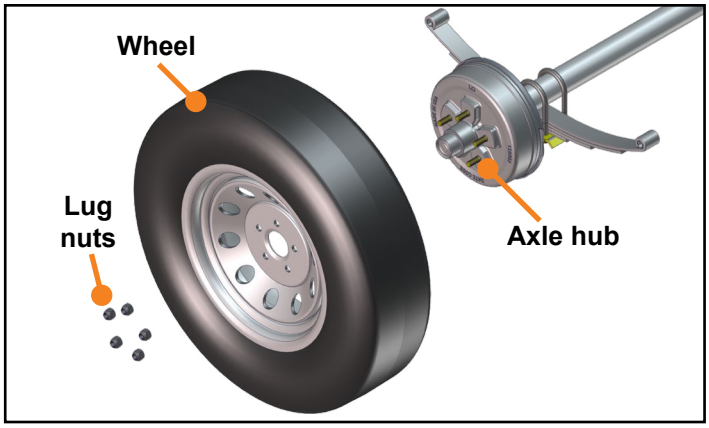

Fig.2

4. Remove the dust cap by prying the edge out of the hub with a screwdriver or prybar **(Fig. 3)**.

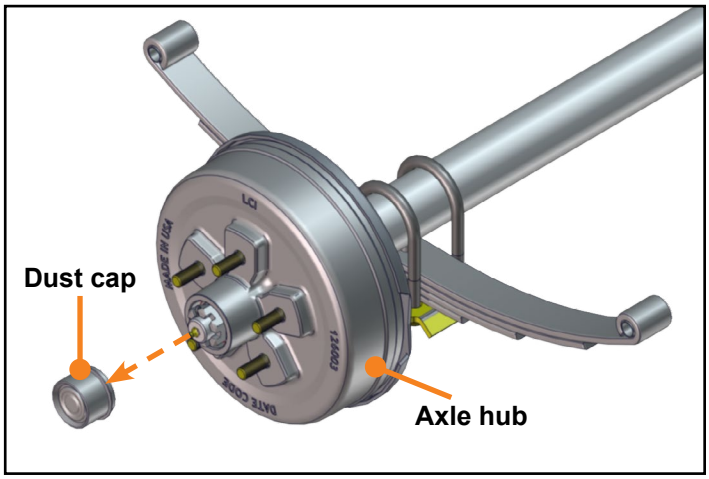

Fig.3

1. Using a pair of pliers, pull the cotter pin from the spindle nut and discard the cotter pin **(Fig. 4)**.

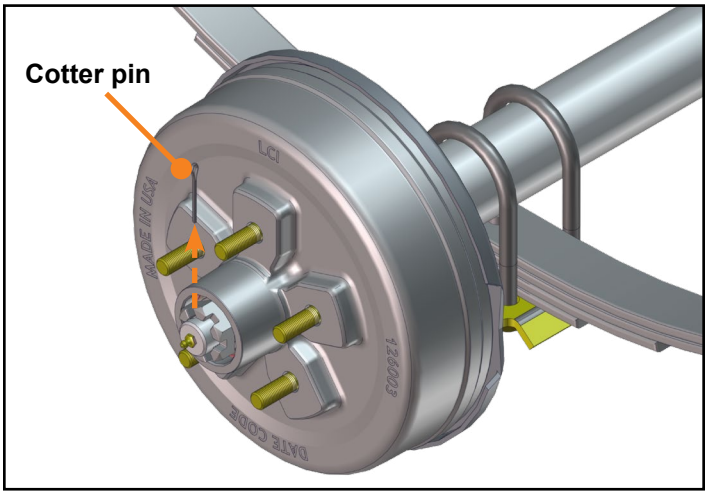

Fig.4

2. Using a socket and ratchet, remove the spindle nut from the spindle **(Fig. 5)**.

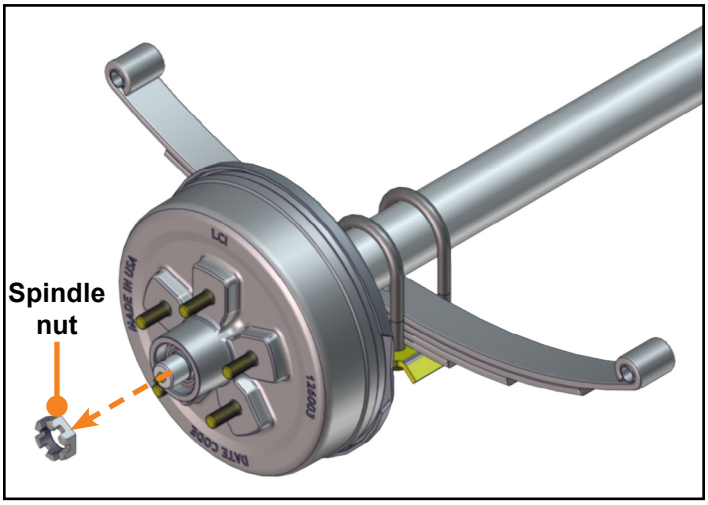

Fig.5

3. Remove the spindle washer from the spindle **(Fig. 6)**.

4. Place hand over nose of hub during removal to contain outer bearing lug or remove outer bearing cone prior to removal of hub. Remove the hub from the spindle **(Fig. 7)**.

NOTE: Brakes may need to be adjusted or backed off to remove hub from spindle.

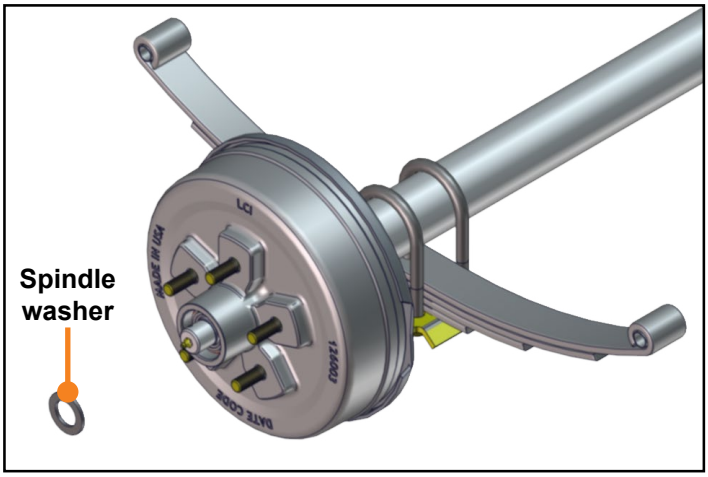

Fig.6

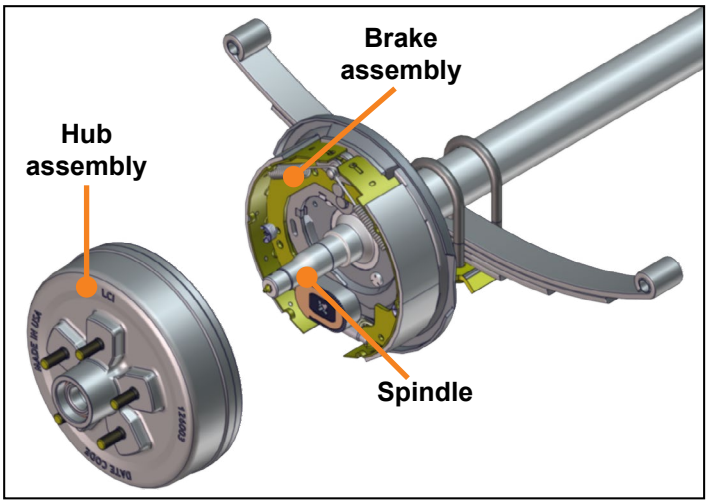

Fig.7

Brake Adjustment

⚠WARNING

PRIOR TO TESTING OR ADJUSTING BRAKES, BE SURE AREA IS CLEAR OF ANY PEOPLE AND VEHICLES. FAILURE TO PERFORM TEST IN A CLEAR AREA MAY RESULT IN DEATH OR SERIOUS INJURY.

Lippert Electric Brakes are automatic adjust only. If manual adjusting is needed, the following 6-step procedure can be utilized. The brakes should be adjusted in the following manner:

1. Jack up RV and secure on adequate capacity jack stands. Follow RV manufacturer's recommendations for lifting and supporting the RV. Make sure the wheel and drum rotates freely.

⚠WARNING

LIFT UNIT BY FRAME AND NEVER THE AXLE OR SUSPENSION. DO NOT GO UNDER UNIT UNLESS IT IS PROPERLY SUPPORTED BY JACK STANDS. UNSUPPORTED UNITS CAN FALL CAUSING DEATH OR SERIOUS INJURY.

2. Remove the rubber plug from the adjusting slot on the bottom of the brake backing plate **(Fig. 8)**.

3. Insert a screwdriver or standard adjusting tool into the adjusting slot to rotate the starwheel **(Fig. 9)** of the adjuster assembly to expand the brake shoes. Adjust the brake shoes out until the pressure of the linings against the drum makes the wheel very difficult to turn.

4. Then, rotate the starwheel in the opposite direction until the wheel turns freely with a slight lining drag.

NOTE: A second screwdriver will be needed to push the auto adjusting lever away from the starwheel so that the starwheel can be rotated backwards.

5. Replace the rubber plug in the adjusting slot and lower the wheel to the ground.

6. Repeat the above procedure on all brakes. For best results, the brakes should all be set at the same clearance.

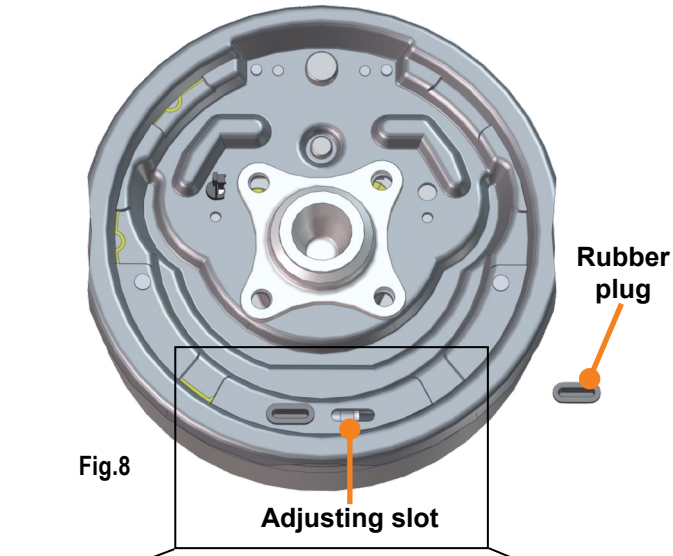

Fig.8

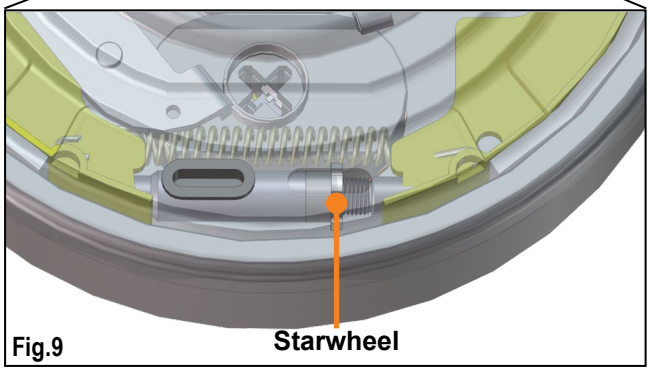

Fig.9

Hub Replacement

1. Place hub assembly onto the axle spindle followed by the spindle washer and spindle nut **(Fig. 10)**. Spindle nut should be torqued to 50 ft-lb (68 Nm). Rotate the hub during the tightening process.

2. Loosen spindle nut to back off the torque.

3. Tighten spindle nut finger tight until snug.

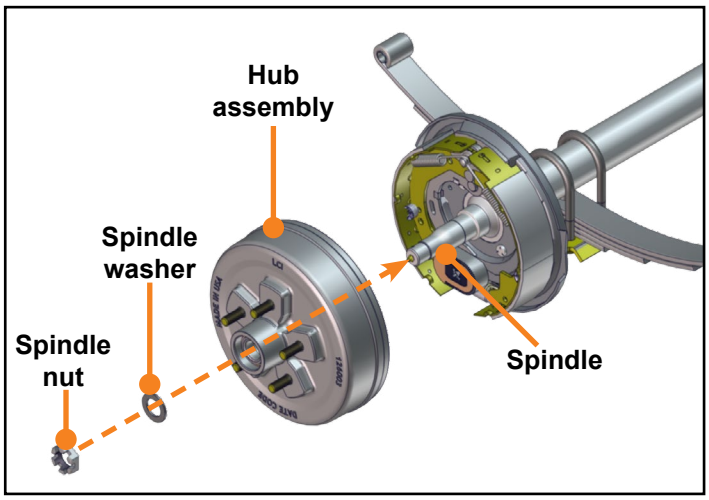

Fig.10

4. Insert ***NEW*** cotter pin **(Fig. 11)**. If cotter pin does not line up with hole, back spindle nut up slightly until pin can be inserted.

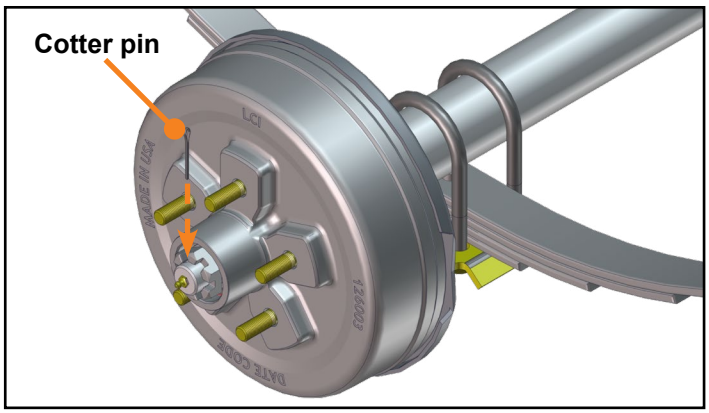

Fig.11

5. Using pliers, bend the cotter pin over to lock nut in place **(Fig. 12)**. Nut should be free to move with only the cotter pin keeping it in place.

6. Re-install dust cap into the hub assembly using a rubber mallet to properly seat it to the hub face **(Fig. 13)**.

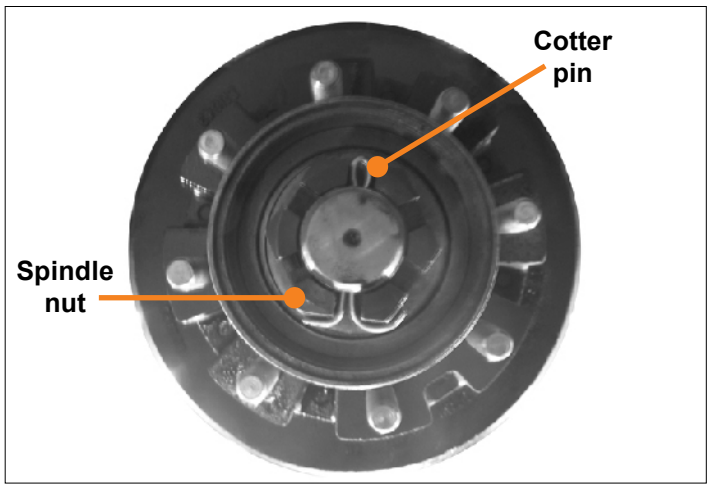

Fig.12

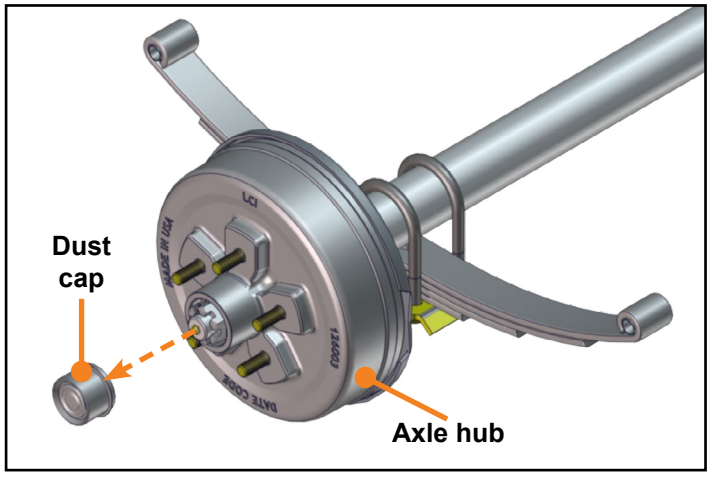

Fig.13

Wheel Torque Requirements

It is extremely important to apply and maintain proper wheel mounting torque limits on your trailer axle. Use of torque wrenches will ensure proper torque limits are applied to wheel mounting lug nuts. Use no other method to torque wheel lug nuts.

⚠ WARNING

PROPER AND ACCURATE TORQUE MUST BE MAINTAINED TO PREVENT WHEELS FROM LOOSENING, STUDS FROM CRACKING AND/OR BREAKING OR OTHER POSSIBLE HAZARDOUS BREAKAGE THAT MAY RESULT IN DEATH, SERIOUS PERSONAL INJURY, SEVERE PRODUCT OR PROPERTY DAMAGE.

Make sure wheel fasteners match the cone angle of the wheel (usually 60°or 90°) being serviced. Attach new wheel to the axle hub as follows:

1. Start all bolts or nuts by hand to prevent cross-threading.

2. Continue to hand-tighten lug nuts in the sequential pattern shown **(Fig. 24)**.

3. After lug nuts are fully hand-tightened, torque nuts in stages in the sequential pattern shown **(Fig. 24)**.

A. Torque lug nuts to the torque values listed in the Wheel Torque Requirements Chart.

4. Lug should be torqued before first road use and after each wheel removal.

A. Check and re-torque lug nuts after 10, 25 and 50 miles (16, 40 and 80 km) . A periodic check during regular service is recommended.

ABS Hubs
Installation Manual
(For Aftermarket Applications)

Wheel Torque Requirements Chart				
Wheel Size	Stud Size	Torque Sequence		
		1st Stage	2nd Stage	3rd Stage
14”	½”	20-25 ft-lbs (27-34 Nm)	50-60 ft-lbs (68-81 Nm)	90-120 ft-lbs (122-163 Nm)
15”	½”	20-25 ft-lbs (27-34 Nm)	50-60 ft-lbs (68-81 Nm)	90-120 ft-lbs (122-163 Nm)
16”	½”	20-25 ft-lbs (27-34 Nm)	50-60 ft-lbs (68-81 Nm)	90-120 ft-lbs (122-163 Nm)
16.5”	½”	20-25 ft-lbs (27-34 Nm)	50-60 ft-lbs (68-81 Nm)	90-120 ft-lbs (122-163 Nm)
14.5” Demount	½”	Tighten sequentially to 85-95 ft-lbs (115-129 Nm)		
16”	9/16”	20-25 ft-lbs (27-34 Nm)	60-70 ft-lbs (81-95 Nm)	120-140 ft-lbs (163-190 Nm)
16.5”	9/16”	20-25 ft-lbs (27-34 Nm)	60-70 ft-lbs (81-95 Nm)	120-140 ft-lbs (163-190 Nm)
16” Dual and 17.5” 2 pc. Swivel Flange Nut	5/8”	30-40 ft-lbs (41-54 Nm)	80-90 ft-lbs (109-122 Nm)	150-175 ft-lbs (203-237 Nm)
16” Dual and 17.5” Flange Nut	5/8”	50-60 ft-lbs (68-81 Nm)	150-200 ft-lbs (203-271 Nm)	275-325 ft-lbs (373-441 Nm)
17.5” Dual Flange Nut	M22	50-100 ft-lbs (68-136 Nm)	250-300 ft-lbs (339-407 Nm)	450-500 ft-lbs (610-678 Nm)

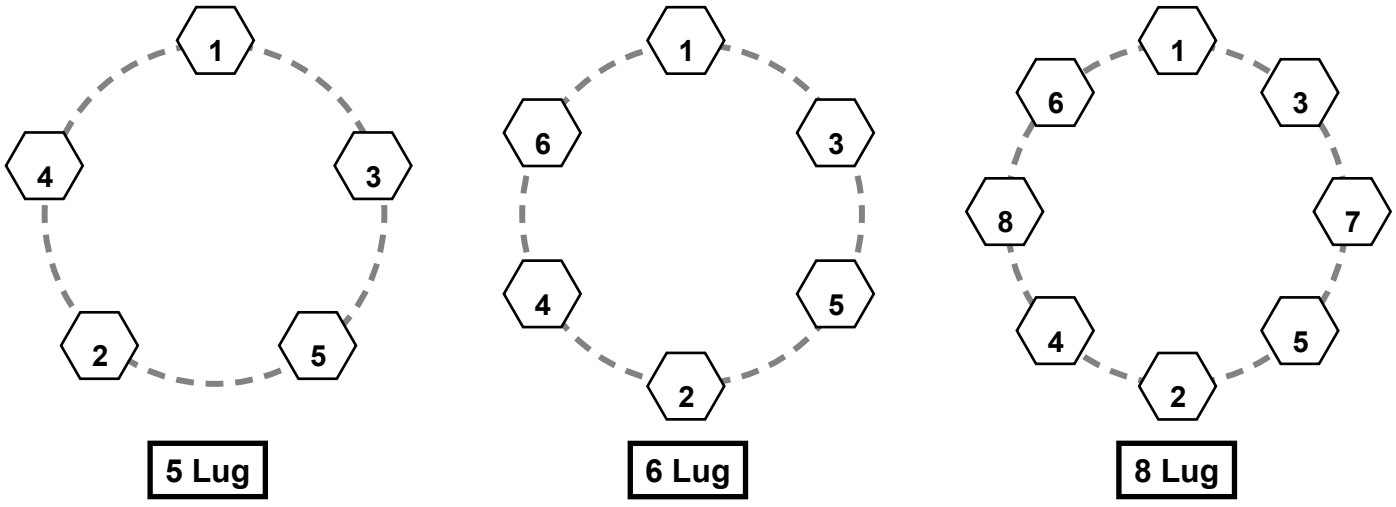

Fig.14

Notes

Manual information may be distributed as a complete document only, unless Lippert provides explicit consent to distribute individual parts.

All manual information is subject to change without notice. Revised editions will be available for free download at lippert.com. Manual information is considered factual until made obsolete by a revised version.

Please recycle all obsolete materials and contact Lippert with concerns or questions.