LIPPERT®

LEVEL UP™



Level Up®
Installation and Owner's Manual
(For Aftermarket Applications)

⚠WARNING

THE LEVEL UP SYSTEM FOR 5TH WHEELS IS ONLY AUTHORIZED FOR INSTALLATION ON LIPPERT BRAND FRAMES WITH AN I-BEAM OF 8 INCHES (203 mm) OR GREATER OR A 6" x 2" x 10" (152 mm x 51 mm x 254 mm) GAUGE TUBE FRAME. ONLY LIPPERT FRAMES WITH THESE PARAMETERS/ DIMENSIONS HAVE BEEN TESTED AND APPROVED AS COMPATIBLE WITH THE PRODUCT.

Table of Contents

System Information 2
Additional Information 2
Safety 3
Preparation 3
Installation 4
- Rear Jacks 4
- Rear Sensor 6
- Front Landing Gear 7
- Power Unit 8
- Assembling and Mounting the Valve Blocks 8
- Hydraulic Hoses 8
- Wiring the System 9
- LCD Touch Pad 9
- Purging the System 11
- Zero Point Calibration 12

Touch Pad Diagram 13
Prior to Operation 13
Operation 13
- Basic Jack Operation 13

5th Wheel Operation 14
- Unhitching Instructions 14
- Auto Level 14
- Auto Level Sequence 14
- Hitch Recognition 14

Maintenance-General 15
- Fluid Recommendation 15
- Preventive Maintenance 15

Manual Override 16
Troubleshooting - Touch Pad 17
- Error Codes 17

Wiring Diagram 18
Plumbing Diagram 19
Notes 20

Level Up®
Installation and Owner's Manual
(For Aftermarket Application)

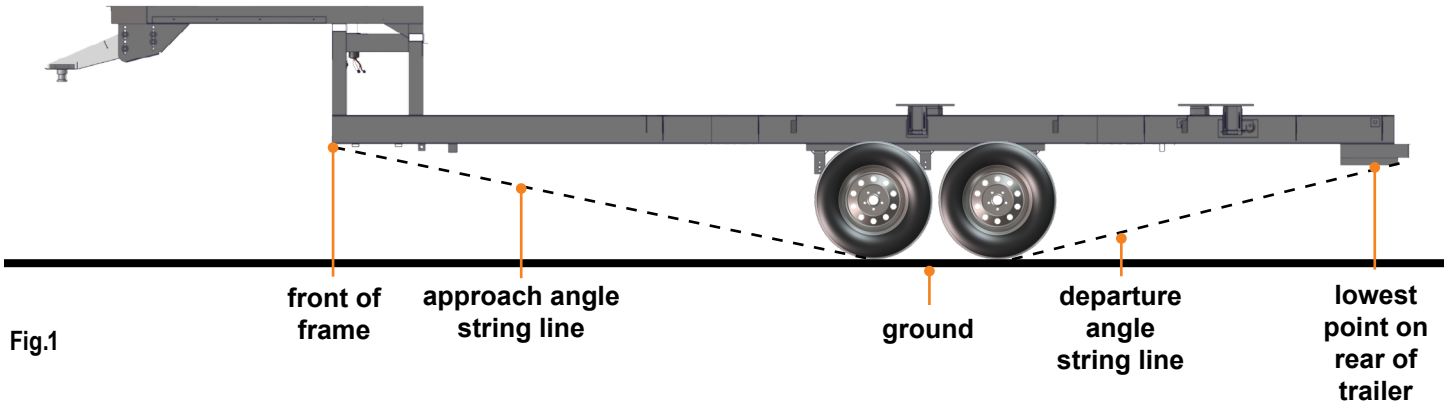

Fig.1

System Information

The patented six-point Level Up hydraulic leveling system levels an trailer in less than a minute using a one-touch auto-leveling feature, and includes an auto re-hitch memory function that remembers the exact height at which the trailer was unhitched. Uneven ground can cause a lot of problems and other leveling systems can stress and twist the chassis, damaging slide systems, sidewalls and windows. Level Up's patented design won't put undue stress on the chassis — Level Up's six-point leveling system incorporates leveling jacks before the front axle and behind the rear axle maintaining the integrity of the trailer at all times.

Quick Facts

- One-touch automatic leveling
- Lightning-fast hydraulics
- Lightweight aluminum jacks
- Wireless remote options available

NOTE: The Level Up System is for 5th wheel applications only.

NOTE: For trailers 29' (8.8 m) and longer, use the 6 point system.

Additional Information

Additional information about this product can be obtained from lci1.com/support or by using the LippertNOW app. Replacement kits can be ordered from https://store.lci1.com/ or by using the LippertNOW app.

The LippertNOW app is available for free on Apple App Store® for iPhone® and iPad® and also on Google Play™ for Android™ users.

App Store® and iPad® are registered trademarks of Apple Inc.
Google Play™ and Android™ are trademarks of Google Inc.

For additional support on this product, scan this QR code or go to: https://support.lci1.com/towable-br-level-up-support-towable-level-up-br-touch-pad

Level Up®
Installation and Owner's Manual
(For Aftermarket Application)

Safety

Read and understand all instructions before installing or operating this product. Adhere to all safety labels.
This manual provides general instructions. Many variables can change the circumstances of the instructions, i.e., the degree of difficulty, operation and ability of the individual performing the instructions. This manual cannot begin to plot out instructions for every possibility, but provides the general instructions, as necessary, for effectively interfacing with the device, product or system. Failure to correctly follow the provided instructions may result in death, serious personal injury, severe product and/or property damage, including voiding of the Lippert limited warranty.

⚠WARNING

THE "WARNING" SYMBOL ABOVE IS A SIGN THAT A PROCEDURE HAS A SAFETY RISK INVOLVED AND MAY CAUSE DEATH OR SERIOUS PERSONAL INJURY IF NOT PERFORMED SAFELY AND WITHIN THE PARAMETERS SET FORTH IN THIS MANUAL.

⚠WARNING

MAKE SURE THE TRAILER IS SUPPORTED AT ALL FOUR CORNERS ACCORDING TO MANUFACTURER'S SPECIFICATIONS. LIFT THE TRAILER BY THE FRAME AND NEVER THE AXLE OR SUSPENSION. DO NOT GO UNDER THE TRAILER UNLESS IT IS PROPERLY SUPPORTED. UNSUPPORTED TRAILERS CAN FALL CAUSING DEATH OR SERIOUS INJURY.

⚠ CAUTION

THE "CAUTION" SYMBOL ABOVE IS A SIGN THAT A SAFETY RISK IS INVOLVED AND MAY CAUSE PERSONAL INJURY AND/OR PRODUCT OR PROPERTY DAMAGE IF NOT SAFELY ADHERED TO AND WITHIN THE PARAMETERS SET FORTH IN THIS MANUAL.

Preparation

⚠WARNING

THE LEVEL UP SYSTEM FOR 5TH WHEELS IS ONLY AUTHORIZED FOR INSTALLATION ON LIPPERT BRAND FRAMES WITH AN I-BEAM OF 8" (203 mm) OR GREATER OR A 6" x 2" x 10" (152 mm x 51 mm x 254 mm) GAUGE TUBE FRAME. ONLY LIPPERT FRAMES WITH THESE PARAMETERS/DIMENSIONS HAVE BEEN TESTED AND APPROVED AS COMPATIBLE WITH THE PRODUCT.

1. Determine how and where the leveling jack brackets will be welded to the frame of the trailer.

NOTE: The rear Level Up jacks should be mounted approximately 12 - 18" (305 - 457 mm) behind the rear tires on a tandem axle trailer or as close to the rear tire as allowed on a tri axle trailer and within the plane of the departure angle **(Fig.1)**, and aligned with each other. The mid Level Up jacks should be mounted approximately 1 foot in front of the front tires. Mid jacks can be offset up to 24 inches to clear obstructions, i.e. entry steps. Determine the location of the current power unit (if one is already on the trailer) or where the new power unit and valve manifolds will be mounted.

2. Check for any obstructions that will require modification of the brackets prior to welding (slide-out cross shafts, outriggers, or manual override connections for slide-outs).

3. Extend all slide-out rooms. This will clear space for welding the Level Up brackets by moving the fender skirts out of the way.

4. Drop the underbelly from the outside edge of the trailer. Start on the side closest to where the pump will be located and un-bolt the underbelly from the front of the trailer to approximately 2 feet (609 mm) beyond the rear tire. On the opposite side of the trailer, un-bolt the underbelly from approximately 2 feet (609 mm) behind the rear tire to approximately 2 feet (609 mm) in front of the front tire. Do not remove any bolts from the center of the underbelly. Do not drop the entire underbelly. Attaching and aligning the entire underbelly will be more difficult than working around the underbelly.

5. Locate and move any wires, hoses, etc. that could be damaged while welding the jack brackets to the frame. Check both inside and outside of the frame. Shields made of metal or wood can be used to push wires and hoses away from the frame area where welding is to be done.

Installation

Rear Jacks

1. When fully retracted, the rear jacks **MUST** be mounted to achieve a minimum ground clearance equal to the departure angle **(Fig.1)** or no less than 8" (203 mm) to the ground to enable maximum level correction. Any additional ground clearance added to the jack location will decrease the amount of level correction available to the system.

2. Bolt the leveling jacks to the mounting brackets to achieve proper ground clearance. Make sure the bolts are tightened to 52-64 ft-lbs (71- 87 Nm) **(Fig.2)**.

3. Identify power unit mounting location. This will determine the orientation of the hydraulic fittings. If the power unit is, or will be, mounted on the driver's side of the front compartment, the driver's side front leveling jack will be the first jack in the system.



Fig.2

4. Install hydraulic fittings to leveling jacks. See **(Figs.3-6)** for details of fitting placement. This example assumes the power unit is closest to the driver's side (roadside) of the trailer.

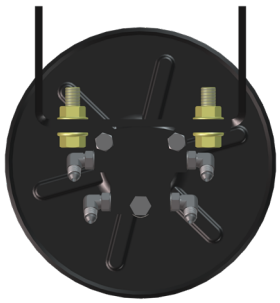

Fig.3

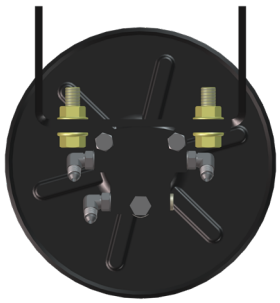

Fig.4

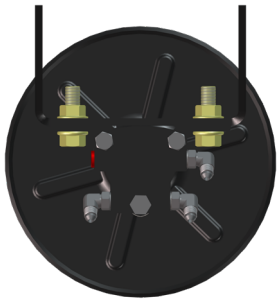

Fig.5

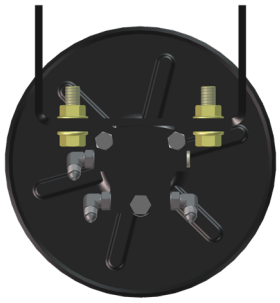

Fig.6

5. If no modifications to the jack brackets are necessary, skip to Step 9.

6. Dry fit the jack brackets to the chassis of the trailer frame. The rear jacks must be mounted within the departure angle, should be aligned with each other from side to side, mounted 12"-18" (305-457 mm) behind the rear tires on a tandem axle trailer or as close to the rear tire, as allowed, on a tri-axle trailer. The mid jacks should be mounted approximately 1 foot (305 mm) in front of the front tires. The mid jacks can be offset from each other side to side by up to 24" (610 mm) in order to fit the jacks around steps or other obstructions. The universal mounting brackets are designed to fit a 12" (305 mm) I-Beam with no modifications. However, the frame on the trailer may not be 12" (305 mm) or there may be obstructions where the jacks are to be mounted. If that is the case, measure for the modifications you need to make to the jack brackets.

7. Mark the needed modifications on the jack brackets **(Fig.7)**.

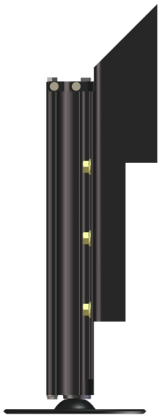

Fig.7

8. Using a cutting torch or plasma cutter, cut the material from the bracket, being careful not to damage the leveling jack or fittings attached to it.

9. Fit the mounting bracket against the I-Beam, making sure that the bottom edge of the mounting flange is flush with the bottom lip of the I-Beam.

10. Tack weld the top and bottom corners of each side of the mounting flange **(Fig.8)**.

11. By implementing a ¼" weld bead, fully weld the bracket to the I-Beam from top to bottom on both sides of the bracket **(Fig.9)**. Make sure to avoid any hoses or wiring that may be in the welding area.

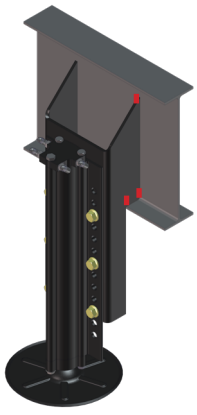

Fig.8



Fig.9

12. Repeat this welding process for the remaining leveling jacks.

13. Paint the mounting brackets and welded frame areas black.

14. Measure and make the hydraulic hoses (orange for extend, black for retract) **(Fig.10)**. Measure from the rear leveling jack to the mid leveling jack. Add 3 ft (914 mm) to this measurement to ensure that there will be enough hose material to run between jacks and prevent kinking. This will be the measurement for the extend and retract hoses between the mid and rear jacks. For example, if the measurement is 9 ft (2.7 m), two 12 ft (3.7 m) (orange hoses and two 12 ft (3.7 m) black hoses would be made. One 9 ft (2.7 m) black hose will need to be made to connect the two rear jacks on the retract plumbing.

proper hose crimping example



Fig.10

15. Measure from the power unit location to the landing gear on the side of the trailer closest to the power unit location. Add 3 ft (914 mm) to this measurement. This will be the length of the retract and extend hoses from the power unit to the landing gear on the side of the trailer closest to the power unit. All hoses must be run on top of the foil insulation inside the underbelly and over the top of any frame crossmembers. See the plumbing diagram for full details on the measuring, making, and installation of these hoses.

NOTE: When running the hoses from the power unit to the rear leveling jacks, bundle them together with the harness for the rear sensor and run them all at once.

16. Secure all hoses to the proper fittings on each jack. Orange hoses connect to the fittings closest to the frame. Black hoses connect to the fittings fartherst away from the frame. Also see the plumbing diagram for a color-coded illustration of the hose orientation.

Rear Sensor

The rear sensor must be installed on the crossmember to the rear of the back axle, centered from curbside to roadside on the trailer with the arrows on the top of the sensor pointing the correct direction. Orientation is imperative for the correct operation of the leveling system **(Fig.11)**.

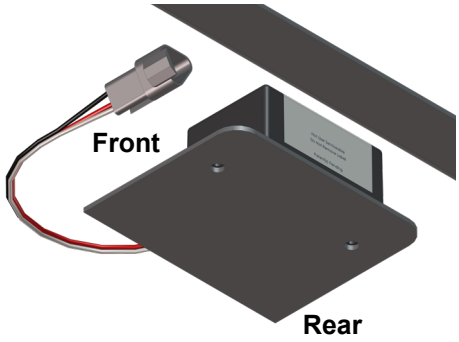

Fig.11

1. Dry fit the mounting plate and the rear sensor to the crossmember. The pre-drilled holes in the plate are for mounting the rear sensor to the plate. Space between the sensor and the crossmember must be left so the wire harness will not be pinched.

2. Attach the rear sensor to the mounting plate using two #12 x 1" hex head self-tapping screws **(Fig.12)**.

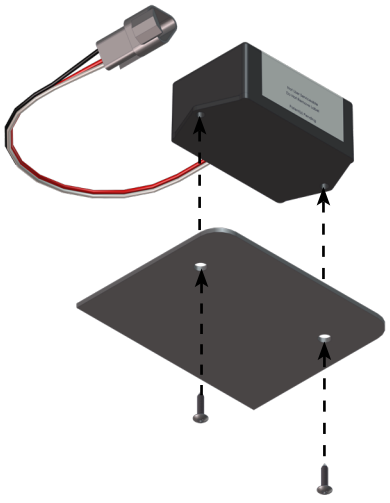

Fig.12

3. Attach the mounting plate and rear sensor assembly to the crossmember using two #12 x 1" hex head self-tapping screws. Ensure that the plate is centered side to side on the frame and that the sensor is oriented properly **(Fig.13)**.

4. Connect the rear sensor harness to the connector on the rear sensor and run the harness through the frame and up to the compartment where the controller will be mounted.

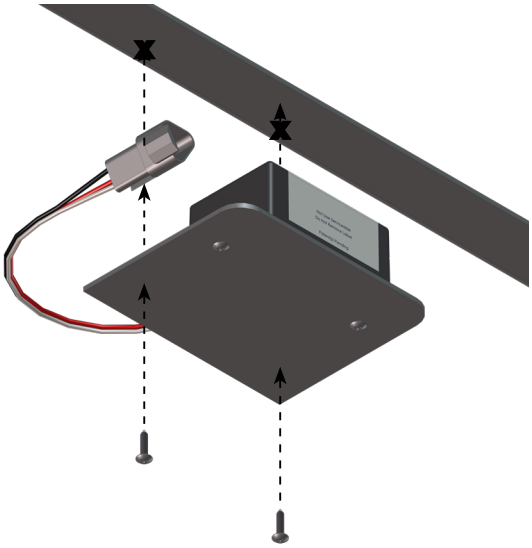

Fig.13

Front Landing Gear

1. Remove old landing gear. If necessary, cut holes in the floor pan of the front compartment to create more clearance to install the new landing gear. Cover plates are included in the parts kit to cover the holes.

2. Check for any obstructions that would require modification of the brackets prior to welding (generator, LP tanks, electrical or electrical components.)

3. Weld mounting bracket to I-beam **(Fig.14)**.

NOTE: Under certain circumstances, tack welding the nuts on the backside of the mounting bracket prior to welding the bracket to the frame will simplify tightening the bolts when mounting the jacks.

4. Paint the mounting brackets and welded frame areas black after the welds have cooled.

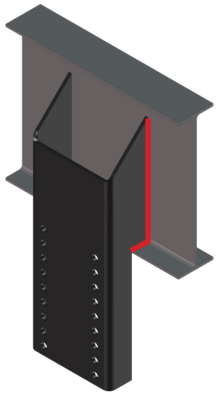

Fig.14



Fig.15

5. Slide the jacks into position on the mounting brackets. On a straight frame, the jack should be positioned as low as possible while maintaining at least 12" of ground clearance when in the retracted position. On a drop frame, the jack should be placed as high as possible in order to maintain at least 12" of ground clearance. Use six bolts and nuts to attach the jack to the mounting bracket **(Fig.15)**. Make sure the bolts are tightened to 52-64 ft-lbs (71-87 Nm).

NOTE: Be sure to not cross thread the bolts and nuts.

6. Install the JIC hydraulic fittings on the landing gears. (See Plumbing Diagram for orientation).

7. Install the cartridge valve and spade coil assembly into the lead landing gear **(Fig.16)**.

NOTE: A sparkproof valve coil **(Fig.17)** may be required if the landing gear is installed in an LP compartment.

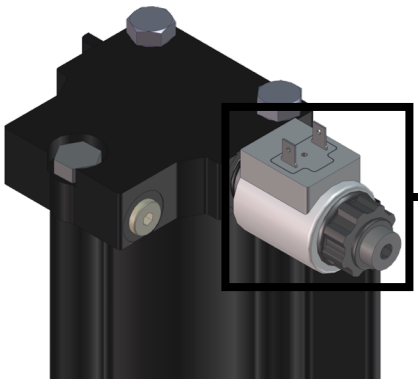

Fig.16

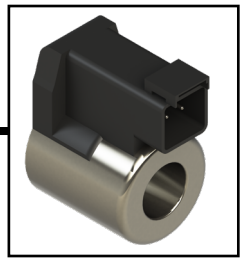

Fig.17

Power Unit

1. The power unit mounting location was determined when the trailer was first inspected. Mount the power unit to the back or side wall of the front compartment in the position you previously determined using six (6) self tapping screws.

2. Install hose fittings into the power unit **(Fig.18)**. The two ports are marked DN and UP. DN = Extend. UP = Retract.

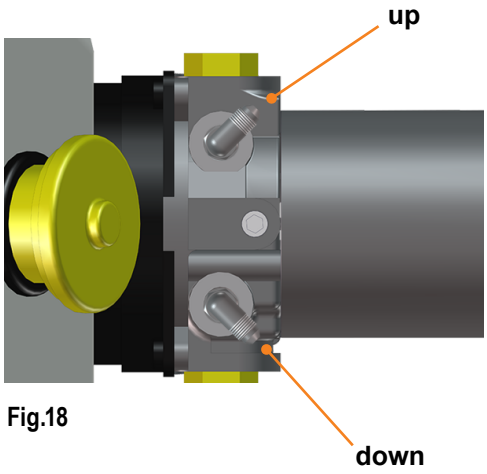

Fig.18

Assembling and Mounting the Valve Blocks

1. Install two valve and coil assemblies in the Extend Valve block **(Fig.19A and 19B)** in the two center ports.

2. Install 4 straight JIC **(Fig.19F, 19G, 19H and 19I)** adapters into the 4 ports across from the two valves you previously installed. Install plugs **(Fig.19D)** (removed from leveling jacks) into the remaining ports.

3. Install the Pressure Switch **(Fig.19C)** in the center port of the retract valve block. Install 3 straight JIC fittings **(Fig.19J, 19K and 19L)** into the 3 ports across from the pressure switch you previously installed. Install plugs **(Fig.19E)** (removed from leveling jacks) into the remaining ports.

4. Cut a piece of ¾" thick plywood into a rectangle large enough to mount both valve blocks.

5. Mount the valve blocks to the plywood using 3" screws. Only drive the screws far enough into the plywood to hold the valve blocks in place. Do not pierce the back side of the plywood. Mount the plywood to the back or side wall of the front compartment next to the pump assembly using the screws already holding the valve blocks in place.

NOTE: Do not overtighten mounting screws. Overtightening may deform or damage the valve blocks causing them to malfunction or leak.

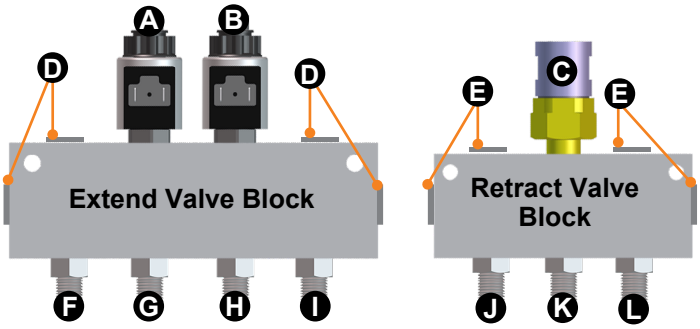

Fig.19

Hydraulic Hoses

1. Connect the rear extend hoses (orange) to the JIC fitting in the extend valve block directly opposite of the two valves, **(Figs.19G and 19H)**. Orientation is not critical at this point, the valve coil wires can be switched to correct the function.

2. Connect the rear retract hose (black) to the JIC fitting in the retract valve block directly across from the pressure switch, **(Fig.19K)**.

3. Make hoses to connect the power unit to the valve blocks. 3' lengths should be sufficient; one (1) extend (orange) hose, and one (1) retract (black) hose.

4. Connect the extend hose to the extend (DN) side of the power unit, and then to the JIC fitting on the extend valve block closest to the power unit, **(Fig.19F)**.

5. Connect the retract hose to the retract (UP) side of the power unit, and then to the JIC fitting on the retract valve block closest to the power unit, **(Fig.19J)**.

6. Make hoses to connect the valve blocks to the lead landing gear. Six-foot lengths should be sufficient; one (1) extend (orange) hose and one (1) retract (black) hose.

7. Connect the extend hose to the final JIC fitting on the extend valve block, **(Fig.20I)** to the JIC fitting directly across from the cartridge valve and coil assembly that is installed on the lead landing gear, **(Fig.20A)**.

8. Connect the retract hose to the final JIC fitting on the retract valve block **(Fig.20L)** to the JIC fitting in the retract port on the lead landing gear **(Fig.20D)**.

9. Make hoses to connect the lead landing gear to the follow landing gear. Nine-foot lengths should be sufficient: one (1) extend (orange) hose, and one (1) retract (black) hose.

10. Connect the extend hose to the JIC fitting in the rear of the lead landing gear **(Fig.21B)** and then to the JIC adapter in the extend port of the follow landing gear.

11. Connect the retract hose to the JIC fitting in the other retract port of the lead landing gear **(Fig.20E)** and then to the fitting in the retract port of the follow landing gear.

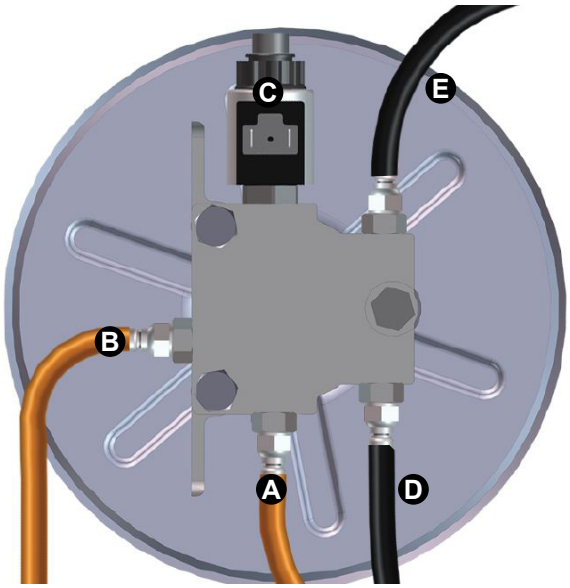

Fig.20

Wiring the System

NOTE: Refer to the wiring diagram throughout this section.

NOTE: The Level Up system wiring is basically a plug and play system. Your kit should include harnesses for the entire system. If it does not, contact Lippert Components to have the proper harnesses shipped to you.

1. Install the controller to the ceiling of the front compartment. It must be centered side to side, and oriented according to the arrows on the controller label.

2. Connect the rear sensor harness to the matching port on the controller.

NOTE: Each connector on the controller is a different shape and has a different number of pins. Each harness that connects to the controller can only be connected in one specific way. This prevents the installation of the wrong harness in the wrong connector.

LCD Touch Pad

1. Determine where to mount the touch pad. The touch pad should be mounted in a compartment on the side of the unit so the operator will have a view of the hitch pin while using the touch pad.

2. Remove the face plate of the touch pad from the mounting bezel **(Fig.21)**.

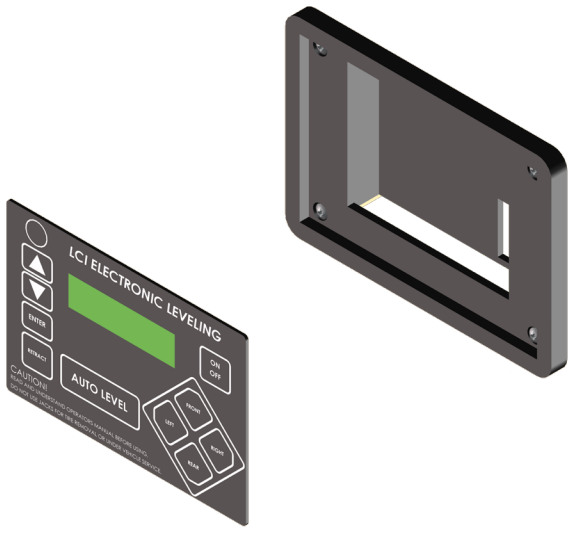

Fig.21

3. Cut a hole in the wall of the compartment 3 ⅜" (86 mm) wide by 2 ¾" (70 mm) high so the top and bottom horizontal cuts are parallel to the floor of the compartment **(Fig.22)**.

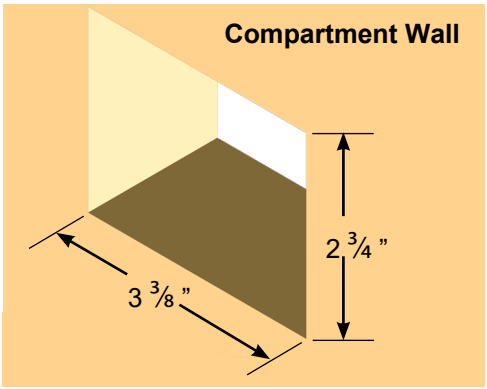

Fig.22

4. Feed the touch pad harness through this hole and run it to the compartment where the controller is mounted. Plug the harness into the appropriate connector on the controller.

5. Insert the touch pad bezel into the cutout and attach it with four #8x1" wood screws with sufficient length to thread into the compartment wall **(Fig.23)**.

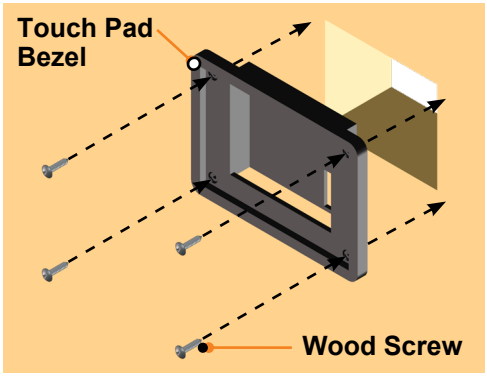

Fig.23

6. Plug the touch pad harness into the connector on the back of the touch pad face plate and snap the face plate into the bezel **(Fig.24 and 25)**.

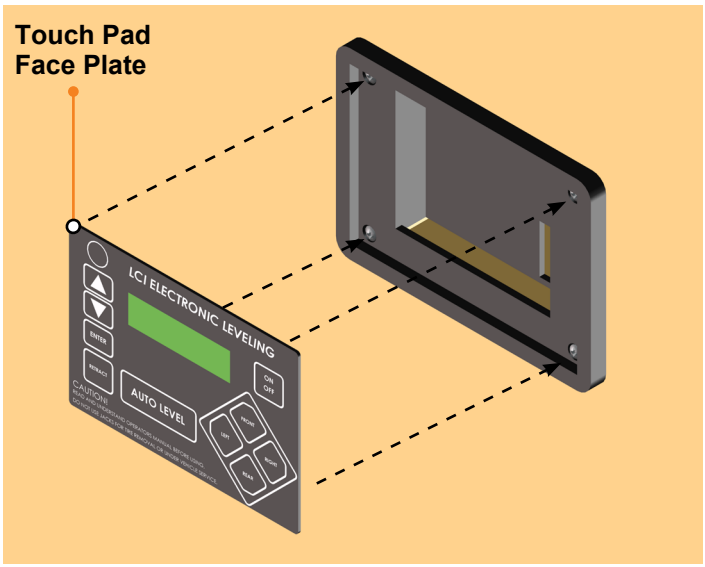

Fig.24



Fig.25

7. The last harness to connect is the one that powers and controls the system. One end will have two connectors that plug into the controller, a 9-pin and a 6-pin, and the other will have eight color coded wires.

8. Connect the 9-pin and 6-pin connectors to the proper ports on the controller.

9. Connect a ground wire from each of the valve coils to the ground post on the dual polarity solenoid.

10. Connect a ground wire from the ground post on the dual polarity solenoid, to a grounding bolt on the frame of the trailer. This will ground the entire system.

NOTE: These grounding wires are installer supplied.

11. Connect a power wire to the center post of the dual polarity solenoid. Mount an 80 amp circuit protection, per RVIA standards, to the back wall of the front compartment. Connect the power wire from the dual polarity solenoid to the AUX end of the 80 amp circuit protection. Connect another power wire to the BAT side of the 80 amp circuit protection and run that to the battery or buss breaker battery hookup.

NOTE: Shore power (plugged in) does not operate the Level Up System as shore power is alternating current. The unit must be connected to a 12V battery, the correct source of direct current for the power unit.

Purging the System

NOTE: Refer to the Plumbing Diagram at the end of this manual for the purging of the system instructions.

1. Fill the pump reservoir with recommended fluid to about ¾ full and remove the corner supports. Be sure any stabilizer jacks have been retracted.

⚠WARNING

MAKE SURE THE TRAILER IS SUPPORTED AT THE HITCH PIN.

2. Disconnect hoses A and B from the lead landing gear.

3. Remove hoses (C) and (D) from the valve blocks and connect (C) to where A was removed and (D) to where (B) was removed from the lead landing gear. You have now connected the power unit directly to the lead landing gear. This will allow you to purge air from the two landing gear without pushing the air into the mid and rear leveling jacks.

4. Manually extend the landing gear until they just touch the ground. Do not try to lift the trailer at this point. Manually retract the landing gear fully.

5. The fluid in the reservoir will now be full of air and there will be foam rising to the top of the fluid. Leave the fill cap off of the reservoir to allow the air to escape from the fluid. Do not try to activate the system again until the fluid in the reservoir has returned to its normal condition.

6. Manually extend the landing gear again, this time to their full stroke.

7. With the landing gear fully extended, remove the retract hose (D) from the landing gear and reattach it to the valve block. Reattach the retract hose (B) you removed in Step 2 to the landing gear.

8. Fully retract the landing gear and then remove the extend hose (C) from the lead landing gear and reattach it to the valve block. Reattach the extend hose (A) you removed in Step 2 to the landing gear.

9. Manually extend the landing gear until they just touch the ground. Do not lift the trailer at this point. Manually extend the left mid and rear leveling jacks, do not lift the trailer. Manually extend the right mid and rear leveling jacks, do not lift the trailer.

10. Add fluid to the reservoir until it is half full.

11. Scroll up on the touch pad until you see "AUTO RETRACT Press Enter to begin." Press Enter.

12. This will retract all the jacks and landing gears. You will hear many popping sounds as air is being flushed from the jacks.

13. The display should read "READY: JACKS UP" at this point.

14. The fluid in the reservoir will now be full of air. Leave the fill cap off of the reservoir to allow the air to escape from the fluid.

15. While that is happening, you can reattach the underbelly to the frame, being sure not to pinch or screw through any of the hydraulic hoses.

16. Once the fluid has returned to its normal color (red), add more fluid to the reservoir until the level is about ½" below the fill cap.

17. Manually extend the landing gear until they just touch the ground. Do not try to lift the trailer at this point. Repeat the process with the left and right leveling jacks. Again, do not try to lift the trailer with the jacks at this point.

18. Scroll up on the interface until you see "AUTO RETRACT Press Enter to begin." Make sure the front of trailer is properly is supported. Press Enter. This will retract all the jacks and landing gear. You may hear more popping sounds as air is still being flushed from the jacks.

19. The display should read "READY: JACKS UP" at this point.

20. The fluid in the reservoir will again be full of air. Leave the fill cap off of the reservoir to allow the air to escape from the fluid.

21. While this is happening, use zip ties to secure the wiring and hydraulic hoses in the front compartment in a neat and orderly manner.

22. Repeat the manual extend and auto retract steps at least one more time. The end goal is that when the jacks retract, no air will be present in the reservoir.

Zero Point Calibration

The "Zero Point" is the programmed point that the trailer will return to each time the Auto Level feature is used. The "Zero Point" must be programmed prior to using the Auto Level feature to ensure the proper operation of the system.

NOTE: Prior to starting this procedure, double check all connections on the controller, valve coils, jacks, and touch pad.

1. Manually run the jacks to level the trailer. This is best achieved by placing a level in the center of the trailer and leveling it both front to back and then side to side.

2. Once the trailer is level, turn off the touch pad.

3. With the touch pad off, press and release the "FRONT" button ten (10) times and then press and release the "REAR" button ten (10) times.

4. The touch pad will flash and beep and the display will read "ZERO POINT CALIBRATION ENTER to set, Power to Exit" **(Fig.26)**.

5. To set the current position as the zero point, press the "ENTER" button.

6. LCD display will read "Zero Point stability check" **(Fig.27)**.

7. LCD display will read "Zero point set successfully" once process is complete **(Fig.28)**.

8. The system will set this point as its level state and the touch pad will turn off.



Fig.26

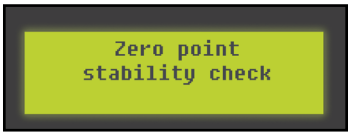

Fig.27



Fig.28

Touch Pad Diagram

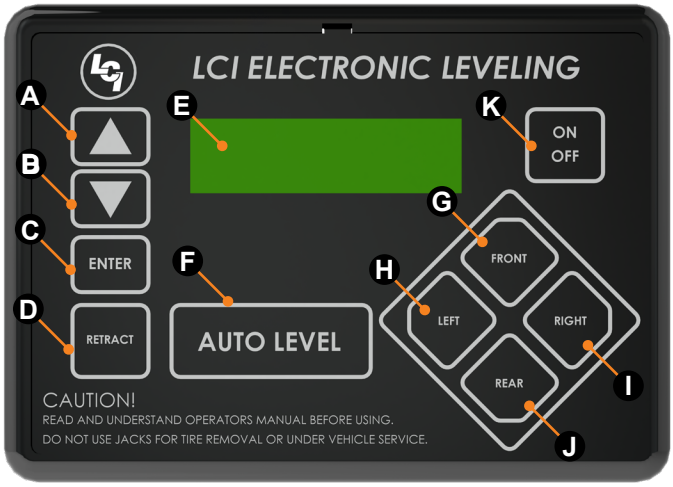

Fig.29

Callout	Description
A	UP ARROW - Scrolls up through the menu on LCD.
B	DOWN ARROW - Scrolls down through the menu on LCD
C	ENTER - Activates modes and procedures indicated on LCD.
D	RETRACT - Places leveling system into retract mode (Manual mode ONLY).
E	LCD DISPLAY - Displays procedures and results.
F	AUTO LEVEL - Places leveling system into auto level mode.
G	FRONT BUTTON - Activates both front jacks.
H	LEFT BUTTON - Activates left leveing jack(s) in manual mode.
I	RIGHT BUTTON - Activates right leveling jack(s) in manual mode.
J	REAR BUTTON - Activates leveling jacks in manual mode.
K	POWER BUTTON - Turns leveling system on and off.

Prior to Operation

The leveling system shall only be operated under the following conditions:

1. The unit is parked on a reasonably level surface.

2. Be sure all persons, pets and property are clear of the unit while Lippert Level Up Automatic System is in operation.

3. Ensure the battery of the unit is fully charged or that the unit is plugged into shore power prior to attempting to operate the system. Level Up requires a minimum of 12 VDC from the battery for proper operation.

Operation

Basic Jack Operation

1. Landing gear Jacks

Landing gear jacks can be operated any time the system is "ON" but NOT in the "AUTO MODE." By pushing the "FRONT" button **(Fig. 29G)**, both front or landing gear jacks can be extended. If the touch pad is put in the "RETRACT" mode, indicated by the orange illuminated LED next to the "RETRACT" button **(Fig. 30D)**, the front jacks can be retracted together by pushing the "FRONT" button.

2. Level Up jacks

The Level Up jacks operate when the "AUTO MODE" is activated or the touch pad is in the "MANUAL MODE." Once system is in "MANUAL MODE," pressing the "REAR" button **(Fig. 30J)** will extend all Level Up jacks at the same time. Press the "LEFT" or "RIGHT" buttons **(Fig. 30H and 30I)** to operate Level Up jacks on the left or right side of the unit, respectively.

5th Wheel Operation

Unhitching Instructions

1. Push touch panel "ON/OFF," **(Fig. 29K)** to turn system on. LCD Screen **(Fig. 29E)** lights up.

2. LCD will display status … "NOT Level JACKS: UP" **(Fig. 30A)**.

3. Orange arrow lights **(Fig. 30B)** may come on, indicating the current disposition of the unit.

4. Push "FRONT" button **(Fig. 29G)** to extend landing gear jacks and lift front of unit to take the weight of the 5th wheel off of the hitch.

5. Uncouple the 5th wheel connection on the tow vehicle.

6. Pull tow vehicle away and park at a safe distance.

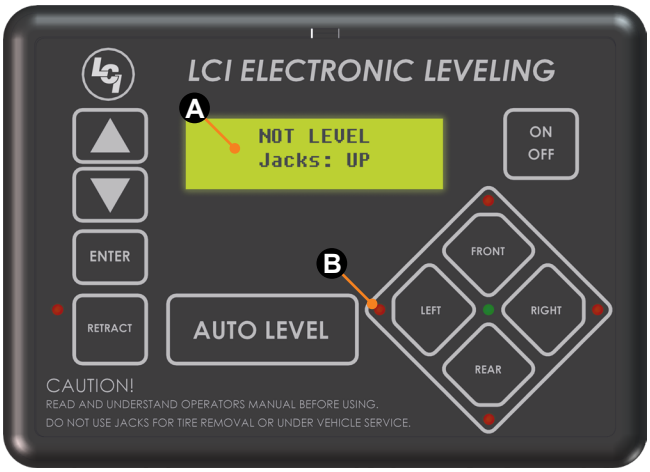

Fig.30

Auto Level

NOTE: Prior to unhitching from the tow vehicle, ensure unit is parked on a level surface and chock the tires of the unit.

1. After unhitching from tow vehicle press "AUTO LEVEL" **(Fig. 29F)**.

NOTE: Pressing any button during an Auto Level sequence will abort the auto leveling cycle.

NOTE: In order for hitch recognition feature to function, the auto level sequence **MUST** be started with the front of the unit above level.

Auto Level Sequence

1. Front landing gear retract, lowering the front of the unit below level, stopping, then lifting the front end to level the unit front to back.

2. The left side leveling jack(s) extend and raise the roadside of the unit.

3. The right side leveling jack(s) extend and raise the curbside of the unit, beginning side to side leveling.

4. The front landing gear extend to complete the leveling cycle.

5. Additional left to right or front to back leveling may occur if the controller deems necessary.

NOTE: If the auto level sequence does not happen as stated above, check to ensure proper manual function in all zones.

Hitch Recognition

1. Turn on touch pad.

2. Press the left and right buttons simultaneously **(Fig.29H and 29I)**.

3. The front of the trailer will raise to the height where the auto level sequence was started.

NOTE: If the auto level sequence was started with the front of the trailer in a below-level condition, the Hitch Recognition will not function and the LCD will display "Feature Disabled." In order for hitch recognition feature to function, the auto level sequence must be started with the front of the trailer above level.

4. Connect tow vehicle and make sure 5th wheel and hitch are connected and locked.

5. Push "UP" arrow until "AUTO RETRACT" appears in LCD screen.

6. Push "ENTER". System will immediately retract all jacks.

Maintenance-General

1. Remove dirt and road debris from leveling jacks and landing gear and stabilizer struts (if equipped) as needed.

2. If jacks are down for extended periods, it is recommended to spray exposed jack tubes with a spray lubricant every three months for protection. If the 5th Wheel is located in a salty air environment, it is recommended to spray the jack tubes every 4 - 6 weeks.

3. Each month, check that the fluid level is within ¼" of the fill spout lip while leveling jacks and slide-outs are fully retracted.

NOTE: Always fill the reservoir with the leveling jacks and slide-outs fully retracted. Filling the reservoir when leveling jacks and slide-outs are extended will cause the reservoir to overflow into its compartment when the leveling jacks and slide-outs are retracted.

4. Inspect and clean all of the 5th Wheel's power and electrical connections prior to the first use of the 5th Wheel at the start of the traveling season and prior to storing the 5th Wheel. If corrosion is evident, clean all corrosion with a wire brush, then apply dielectric grease to the connections.

5. Make sure to turn the manual override set screw on the valve back to the counterclockwise position after manually extending or retracting the landing gear or leveling jacks.

Fluid Recommendation

Automatic transmission fluid (ATF) with Dexron®III or Mercon® V or a blend of both is recommended by Lippert Components, Inc. For a list of approved fluid specifications, see *TI-188 Hydraulic Operation Fluid Recommendation*.

NOTE: In colder temperatures (less than 40 ° F) the jacks may extend and retract slowly due to the fluid's molecular nature. Since the pressure switch is based on the dynamics of the fluid, visual inspection is recommended to confirm all the leveling jacks are properly stowed before traveling regardless of what the controller states.

Preventive Maintenance

1. Check hydraulic fluid in reservoir every 12 months. If fluid is a clear, red color, do not change. If fluid is milky, pink and murky, and not clear red in color, drain reservoir and add new fluid. Hydraulic fluid in reservoir should be changed at least every five years.

NOTE: Check the fluid only when all the jacks are fully retracted.

NOTE: When checking the hydraulic fluid level, fill to within ¼" to ½" of fill spout.

2. Inspect and clean all power unit electrical connections every 12 months. If corrosion is evident, use a small amount of lubricant to remove corrosion. Contacts must be cleaned with a non-residue cleaner prior to use. Lippert recommends the use of an electrical contact cleaner spray.

3. Remove dirt and road debris from jacks as needed.

⚠WARNING

THE COACH SHOULD BE SUPPORTED AT BOTH FRONT AND REAR AXLES WITH JACK STANDS BEFORE WORKING UNDERNEATH. FAILURE TO DO SO MAY RESULT IN DEATH, SERIOUS PERSONAL INJURY OR SEVERE PRODUCT OR PROPERTY DAMAGE.

4. If jacks are down for extended periods, it is recommended to spray exposed jack rods with a dry silicone lubricant every three months for protection. If the trailer is located in a salty environment, it is recommended to spray the rods every four to six weeks.

Manual Override

The Lippert Level Up® Automatic Leveling System can be manually operated with an electric drill. In the event of electrical or system failure, this manual method of extending and retracting the jacks can be used.

NOTE: Unhook the power unit motor from the power source prior to attempting the manual override procedure.

1. Locate the valves that are paired with the landing gear or leveling jack to be manually overridden.

A. Landing Gear - Valve located on the lead landing gear **(Fig.31)**.

B. Leveling Jacks - Valve located on valve block **(Fig.32)**.

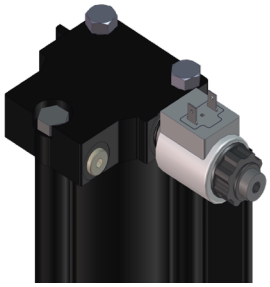

Fig.31

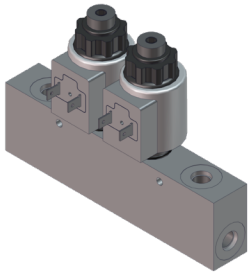

Fig.32

2. Using a 5⁄32" hex wrench, open the valve by turning the manual override set screw clockwise **(Fig.33)**.

3. Remove protective label from power unit motor to reveal the manual override coupler **(Fig.34)**.

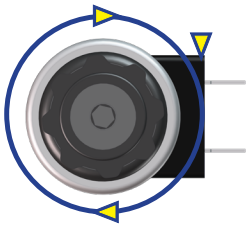

Fig.33



Fig.34

4. Using an electric drill with a ¼" hex bit, insert the hex bit into the manual override coupler to manually operate the system **(Fig.35)**.

A. Run the drill forward (clockwise) to retract the landing gear or leveling jacks.

B. Run the drill in reverse (counterclockwise) to extend the landing gear or leveling jacks.

5. Be sure to turn the manual override set screw on the valve back to the counterclockwise position after extending or retracting the landing gear or leveling jack **(Fig.36)**.

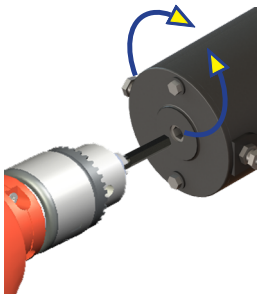

Fig.35

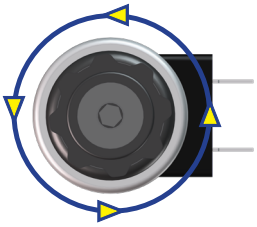

Fig.36

Troubleshooting - Touch Pad

Error Codes

NOTE: To clear an error from the touch pad, repair or otherwise correct the issue, then press "ENTER". If the error is still present, the message will be displayed again.

⚠WARNING

ENSURE THE TRAILER IS SUPPORTED AT BOTH THE FRONT AND REAR WITH JACK STANDS BEFORE PERFORMING ANY TROUBLESHOOTING OR SERVICE TO THE TRAILER. FAILURE TO DO SO MAY RESULT IN DEATH OR PERSONAL INJURY.

LDC Message	What's Happening	What should be done?
****ERROR**** Excess Angle	Controller not properly secured.	Check and secure controller placement
	Excessive angle reached during auto operation	Relocate the trailer.
****ERROR**** Excess Angle	Controller not properly secured.	Check and secure controller placement
	Excessive angle reached during manual operation	Relocate the trailer.
****ERROR**** Feature Disabled	Front of trailer below level when starting Auto Level process (only when trying to initiate Hitch Recognition).	Push the "FRONT" button to rais the trailer up to hitch height and connect to tow vehicle.
	Touch pad power not cycled between consecutive leveling operations.	Turn touch pad off and then back on to reset the system.
	Zero point not set	Set zero point.
****ERROR**** Low Voltage	Battery voltage dropped below 9.5V.	Check wiring repair or replace.
		Test battery voltage under load - charge or replace.
****ERROR**** Out of Stroke	Jack has reached maximum stroke length and is unable to lift.	Check dispostion of jacks and/or relocate the trailer.
****ERROR**** External Sensor	Bad connection or wiring from the controller to the rear sensor.	Replace or repair connection to rear remote sensor.
****ERROR**** Jack Time Out	Time limit exceeded for the requested auto operation.	Check disposition of jacks.
****ERROR**** Auto Level Fail	Unable to auto level due to uneven ground.	Check disposition of jacks and/or relocate the trailer.
	Unable to auto level due to zero point being set incorrectly.	Reset zero point.
****ERROR**** Bad Calibration	Sensor calibration values are out of range.	Replace controller.
****ERROR**** Internal Sensor	Internal sensor problem.	Replace controller.
PANIC SENSOR Internal Sensor	The user pressed a button on the touch pad during an automatic operation.	Restart automatic operation and then refrain from pressing any button on the touch pad.

Wiring Diagram

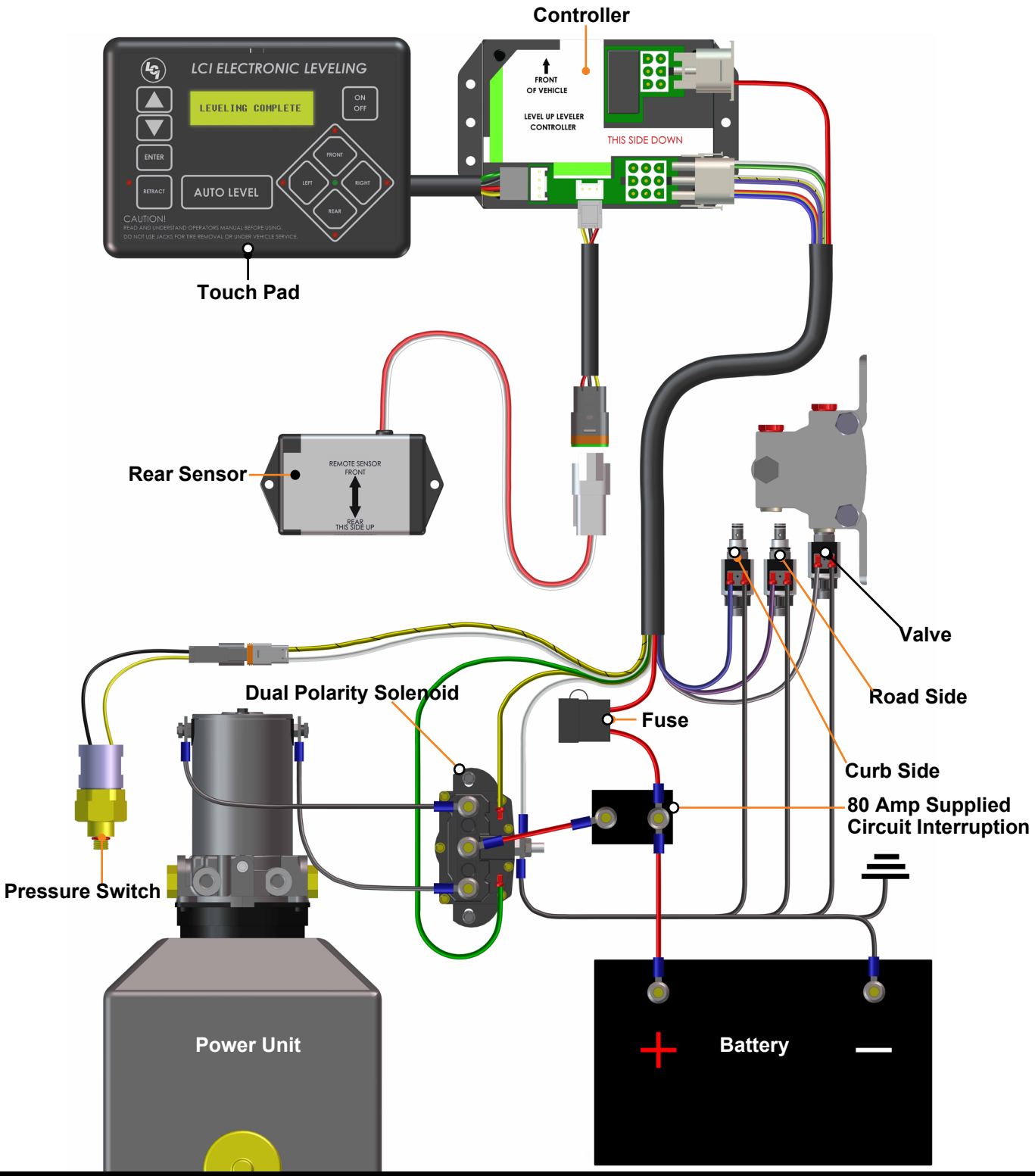

Plumbing Diagram

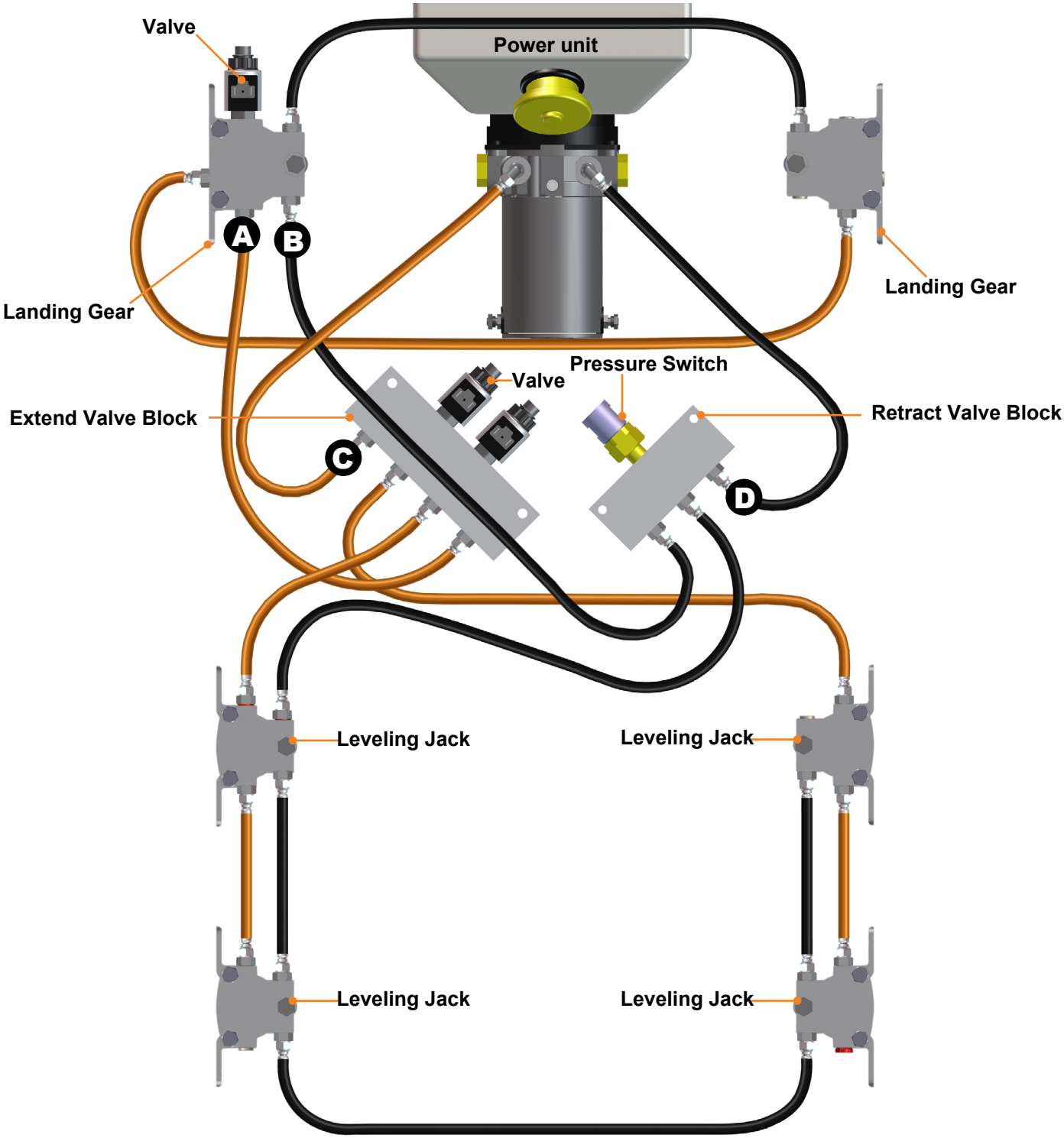

Notes

Manual information may be distributed as a complete document only, unless Lippert provides explicit consent to distribute individual parts.

All manual information is subject to change without notice. Revised editions will be available for free download at lippert.com. Manual information is considered factual until made obsolete by a revised version.

Please recycle all obsolete materials and contact Lippert with concerns or questions.