FOS05TASF

Vehicle Obervation System
5” Furrion Vision S™ Single Camera System



5” Monitor



Interior Table Stand



Windshield Mount



Doorway Security / Rear Camera

Main Features

Monitor & Accessories

- DIGITAL WIRELESS
- TOUCH SCREEN
- ANTI-GLARE
- REAR ASSIST MARKER LINES
- SECURITY CAMERA AUTO-WAKE
- DISPLAY UP TO 4 CAMERAS
- AUDIO
- WINDSHIELD MOUNT
- INTERIOR TABLE STAND
- WALL MOUNT (SOLD SEPARATELY)

Doorway Security / Rear Camera

- CMOS 120° VIEW ANGLE
- INFRARED NIGHT VISION
- CAMERA RESOLUTION
- INTELLIGENT IR CUT FILTER
- MOTION DETECT
- WATERPROOF
- BUILT IN MICROPHONE

Monitor

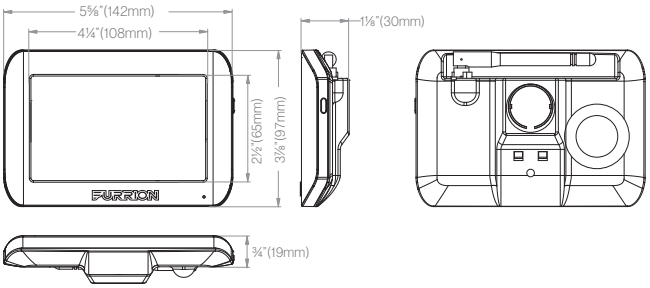

Interior Wall Mount (Sold Separately)

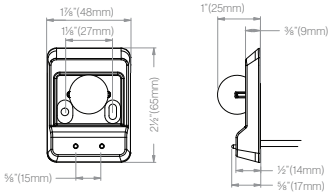

Interior Table Stand

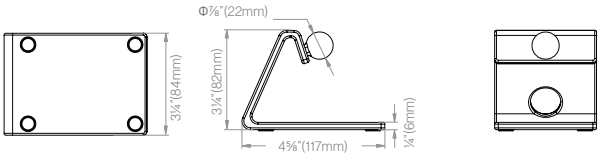

Doorway Security / Rear Camera

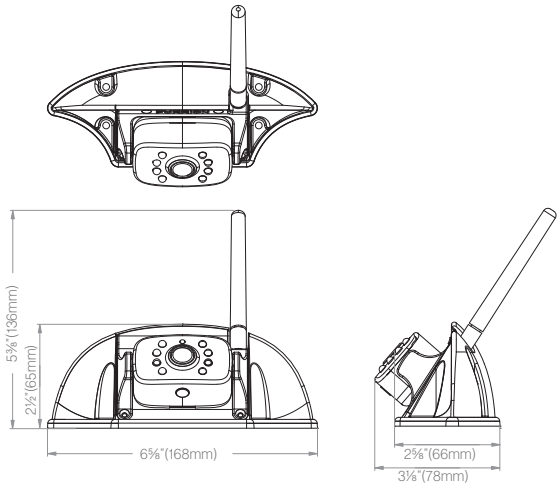

Windshield Mount

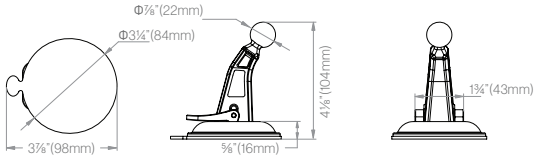

Part Number	Product
FOS05TASF	5" + + +

Specifications

Camera

Night Vision Distance	<16ft (5m)
CMOS Size	⅓"
Optical Lens	F2.0
IR Cut Filter	850nm Automatic
View Angle/Degree	120°
Working Current (IR ON)	<400mA@12V
Working Current (IR OFF)	<250mA@12V
Camera Pixel	720 x 480
Waterproof	IP65

Monitor

LCD Backlight ON	<500mA@12V
LCD Backlight OFF	<300mA@12V
LCD Size	5"
LCD Resolution at 1View	720 x 480
LCD Brightness	420 cd/m²
LCD Contrast	600:1
LCD Viewing Angle	L/R65, U50, D60
LCD Aspect Ratio	16:9
Channel Bandwidth	20MHz

Camera/Monitor

Supply Voltage	DC8 to 30V
Wireless Frequency	2.4GHz
Wireless Range	<492.13ft (150m) (open area)
Emitting Power	18+/-2 dBm
Transmitting Speed	6 Mbps (single)
RF Modulation	OFDM
Receiving Sensitivity	-88 +/-3dBm
Decompression Form	H.264
Delaying Time	<250ms
Type Approval	FCC Part 15

Dimensions/Weight

Individual Packaging Dimensions (W x H x D)	9 x 9⅛ x 3⅞" (230 x 233 x 98mm)
Net weight (lbs/kgs)	1.5/0.7
Gross weight (lbs/kgs)	2.4/1.1

Master Carton

Quantity per Master Carton	10
Master Carton Dimensions (W x H x D)	18¾ x 20⅛ x 10" (475 x 510 x 253mm)
Master Carton Gross Weight (lbs/kg)	26.5/12.0

FOS05TASF-V1.6

CCD-0006144 | REV DATE: 10.20.22

For all concerns or questions, please contact Lippert | Ph: 432-LIPPERT (432-547-7378) | Web: lippert.com | E-mail: customerservice@lci1.com

Furrion® and the Furrion logo are registered trademarks and Furrion Vision S™ is a trademark licensed for use by Furrion Ltd. and registered in the U.S. and other countries. © 2007-2020 Furrion Ltd.