GREYSTONE

Model: P90D23AP-X3-FR03
Lippert PN: 2022302295

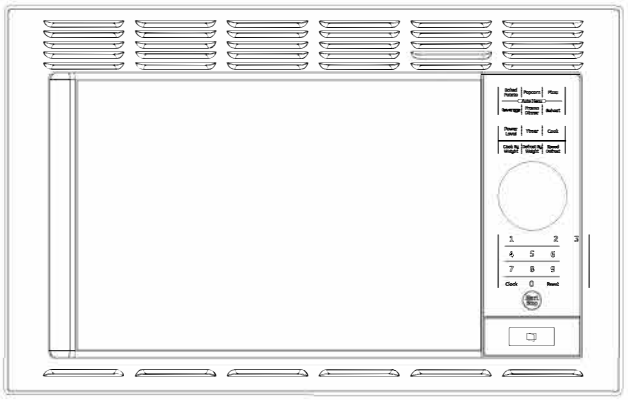

Microwave Oven User's manual

Please read these instructions carefully before installing and operating the oven.

Record in the space below the SERIAL NO. found on the nameplate on your oven and retain this information for future reference.

SERIAL NO.

Please save sales receipt for warranty.

PRECAUTIONS TO AVOID POSSIBLE EXPOSURE TO EXCESSIVE MICROWAVE ENERGY

1. Do not attempt to operate this oven with the door-open since open-door operation can result in harmful exposure to microwave energy. It is important not to defeat or tamper with the safety interlocks.
2. Do not place any object between the oven front face and the door or allow soil or cleaner residue to accumulate on sealing surfaces.
3. Do not operate the oven if it is damaged. It is particularly important that the oven door close properly and that there is no damage to the:
   1. Door (bent),
   2. Hinges and latches (broken or loosened),
   3. Door seals and sealing surfaces.
4. The oven should not be adjusted or repaired by anyone except properly qualified service personnel.

CONTENT

PRECAUTIONS TO AVOID POSSIBLE EXPOSURE TO EXCESSIVE MICROWAVE ENERGY 1
IMPORTANT SAFETY INSTRUCTIONS 2
INSTALLATION GUIDE 4
GROUNDING INSTRUCTIONS 4
UTENSILS GUIDE 5
COOKING TECHNIQUES 6
SPECIFICATIONS 7
PART NAMES 8
CONTROL PANEL 9
OPERATION INSTRUCTIONS 10
- Setting the clock 10
- Setting the timer 10
- Setting a cooking program 10
- Speed defrost 11
- Cook by weight 12
- Defrost by weight 12
- Setting child lock 12

QUICK COOK SETTINGS 13
- POPCORN 13
- BAKED POTATO 13
- PIZZA 13
- BEVERAGE 14
- FROZEN DINNER 14
- REHEAT 14

CLEANING AND CARE 15

IMPORTANT SAFETY INSTRUCTIONS

When using electrical appliances, basic safety precautions should be followed, including the following:

WARNING - To reduce the risk of burns, electric shock, fire, and injury to persons or exposure to excessive microwave energy:

1. Read all instructions before using the appliance.

2. Read and follow the specific "PRECAUTIONS TO AVOID POSSIBLE EXPOSURE TO EXCESSIVE MICROWAVE ENERGY" on page 1.

3. This appliance must be grounded. Connect only to properly grounded outlet. See "grounding instructions" on page 3.

4. Install or locate this appliance only in accordance with the provided installation instructions.

5. Some products such as whole eggs and sealed containers -for example, closed glass jars- are able to explode and should not be heated in this oven.

6. Use this appliance only for its intended use as described in this manual. Do not use corrosive chemicals or vapors in this appliance. This type of oven is specifically designed to heat, cook, or dry food. It is not designed for industrial or laboratory use.

7. As with any appliance, close supervision is necessary when used by children.

8. To reduce the risk of fire in the oven cavity:

a. Do not overcook food. Carefully attend appliance when paper, plastic, or other combustible materials are placed inside the oven to facilitate cooking.

b. Remove wire twist-ties from paper or plastic bags before placing bag in oven.

c. If materials inside the oven should ignite, keep oven door closed, turn oven off, and disconnect the power cord or shut off power at the fuse or circuit breaker panel.

d. Do not use the cavity for storage purposes. Do not leave paper products, cooking utensils or food in the cavity when not in use.

9. Liquids, such as water, coffee, or tea can be overheated beyond the boiling point without appearing to be boiling due to surface tension of the liquid. Visible bubbling or boiling when the container is removed from the microwave oven is not always present. THIS COULD RESULT IN VERY HOT LIQUIDS SUDDENLY BOILING OVER WHEN A SPOON OR OTHER UTENSIL IS INSERTED INTO THE LIQUID. To reduce the risk of injury to person:

1) Do not overheat the liquid.

2) Stir the liquid both before and halfway through heating it.

3) Do not use straight-sided containers with narrow necks.

4) After heating, allow the container to stand in the microwave oven for a short time before removing the container.

5) Use extreme care when inserting a spoon or other utensil into the container.

10. Do not heat oil or fat for deep-frying. It is difficult to control the temperature of oil in microwave oven.

11. Pierce foods with heavy skins such as potatoes, whole squash, apples and chestnuts before cooking.

SAVE THESE INSTRUCTIONS

12. The contents of feeding bottles and baby jars should be stirred or shaken and the temperature should be checked before serving in order to avoid burns.

13. Cooking utensils may become hot because of heat transferred from the heated food. Potholders may be needed to handle the utensil.

14. Do not cover or block any openings on the appliance.

15. Do not store or use this appliance outdoors. Do not use this product near water, for example, near a kitchen sink, in a wet basement, near a swimming pool, or similar locations.

16. Do not operate this appliance if it has a damaged cord or a plug, if it is not working properly or if it has been damaged or dropped.

17. Do not immerse cord or plug in water. Keep cord away from heated surface. Do not let cord hang over edge of table or counter.

18. Use only thermometers, which are specifically designed for use in microwave ovens.

19. Do not operate any heating or cooking appliance beneath this appliance.

20. Be certain the glass tray and roller rings are in place when you operate the oven

21. This appliance should be serviced only by qualified service personnel, contact nearest authorized service facility for examination, repair, or adjustment.

22. When cleaning surfaces of door and oven that comes together on closing the door, use only mild, nonabrasive soaps, or detergents applied with a sponge or soft cloth.

23. This equipment generates, uses and can radiate radio frequency energy and, if not installed and used in accordance with the instructions, may cause harmful interference to radio communications. However, there is no guarantee that interference will not occur in a particular installation. If this equipment does cause harmful interference to radio or television reception, which can be determined by turning the equipment off and on, the user is encouraged to try to correct the interference by one or more of the following measures:

" Reorient or relocate the receiving antenna.

" Increase the separation between the equipment and receiver.

" Connect the equipment into an outlet on a circuit different from that to which the receiver is connected.

" Consult the dealer or an experienced radio/TV technician for help.

SAVE THESE INSTRUCTIONS

INSTALLATION GUIDE

1. Make sure that all the packing materials are removed from the inside of the door.
2. Check the oven for any damage, such as misaligned or bent door, damaged door seals and sealing surface, broken or loose door hinges and latches and dents inside the cavity or on the door. If there is any damage, do not operate the oven but contact qualified service personnel.
3. This microwave oven must be placed on a flat, stable surface to hold its weight and the heaviest food likely to be cooked in the oven.
4. Do not place the oven where heat, moisture, or high humidity are generated, or near combustible materials.
5. For correct operation, the oven must have sufficient airflow. Do not cover or block any openings on the appliance. Do not remove feet on which oven stands.
6. Make sure that the power supply cord is undamaged and does not run under the oven or over any hot or sharp surface.
7. The socket must be readily accessible so that it can be easily unplugged in an emergency.

GROUNDING INSTRUCTIONS

This appliance must be grounded. In the event of an electrical short circuit, grounding reduces risk of electric shock by providing an escape wire for the electric current.

WARNING Improper use of the grounding plug can result in a risk of electric shock.

Consult a qualified electrician or serviceman if the grounding instructions are not completely understood, or if doubt exists as to whether the appliance is properly grounded, and either:

1) If it is necessary to use an extension cord, use only a 3-wire extension cord that has a 3-blade grounding plug and a 3-slot receptacle that will accept the plug on the appliance. The marked rating of the extension cord shall be equal to or greater than the electrical rating of the appliance, or 2) Do not use an extension cord. If the power supply cord is too short, have a qualified electrician or serviceman install an outlet near the appliance.

Electrical Requirements

The electrical requirements are a 120 volt 60 Hz, AC only, 15 amp. It is recommended that a separate circuit serving only the oven be provided. The oven is equipped with a 3-prong grounding plug. It must be plugged into a wall receptacle that is properly installed and grounded.

Power Supply Cord

1. A short power supply cord is provided to reduce the risks resulting from becoming entangled in or tripping over a longer cord.
2. Longer cord sets or extension cords are available and may be used if care is exercised in their use.
3. If long cord or extension cord is used：
   a) The marked electrical rating of the cord set or extension cord should be at least as great as the electrical rating of the appliance.
   b) The extension cord must be a grounding-type 3-wire cord, and The longer cord should be arranged so that it will not drape over the counter top or table top where it can be pulled on by children or tripped over unintentionally.

Notes:

If you have any questions about the grounding or electrical instructions, consult a qualified electrician or service person.

Neither the manufacturer nor the dealer can accept any liability for damage to the oven or personal injury resulting from failure to observe the electrical connection procedures.

Radio or TV Interference

Should there be any interference caused by the microwave oven to your radio or TV, check that the microwave oven is on a different circuit, relocated the radio or TV as far away from the oven as feasible or check position and signal of receiving antenna.

UTENSILS GUIDE

This section lists which utensils can be used in the microwave, which ones have limited use for short periods, and which ones should not be used in the microwave.

✓ RECOMMENDED

Microwave browning dish — Use to brown the exterior of small items such as steaks, chops, or pancakes. Follow the directions provided with your browning dish.

Microwaveable plastic wrap — Use to retain steam. Leave a small opening for some steam to escape and avoid placing it directly on the food.

Paper towels and napkins — Use for short-term heating and covering; these absorb excess moisture and prevent spattering. Do not use recycled paper towels, which may contain metal and could ignite.

Glass and glass-ceramic bowls and dishes — Use for heating or cooking.

Paper plates and cups — Use for short-term heating at low temperatures. Do not use recycled paper, which may contain metal and could ignite.

Wax paper — Use as a cover to prevent spattering.

Thermometers — Use only those labeled "Microwave Safe" and follow all directions. Check the food in several places. Conventional thermometers may be used on microwave food once the food has been removed from the oven.

LIMITED USE

Aluminum foil — Use narrow strips of foil to prevent overcooking of exposed areas. Using too much foil can damage your oven, so be careful. You should keep distance of 1 inch (2.54cm) between aluminum foil and cavity.

Ceramic, porcelain, and stoneware— Use these if they are labeled "Microwave Safe". If they are not labeled, test them to make sure they can be used safely.

Plastic — Use only if labeled "Microwave Safe". Other plastics can melt.

Not Recommended

Glass jars and bottles — Regular glass is too thin to be used in a microwave. It can shatter and cause damage and injury.

Paper bags — These are a fire hazard, except for popcorn bags that are designed for microwave use.

Styrofoam plates and cups — These can melt and leave an unhealthy residue on food.

Plastic storage and food containers — Containers such as margarine tubs can melt in the microwave.

Metal utensils — These can damage your oven. Remove all metal before cooking.

Note:

Should you wish to check if a dish is safe for microwaving, place the empty dish in the oven and microwave on HIGH for 30 seconds. A dish which becomes very hot should not be used.

COOKING TECHNIQUES

Your microwave makes cooking easier than conventional cooking, provided you keep these considerations in mind:

STIRRING

Stir foods such as casseroles and vegetables while cooking to distribute heat evenly. Food at the outside of the dish absorbs more energy and heats more quickly, so stir from the outside to the center. The oven will turn off when you open the door to stir your food.

ARRANGEMENT

Arrange unevenly shaped foods, such as chicken pieces or chops, with the thicker, meatier parts toward the outside of the turntable where they receive more microwave energy. To prevent overcooking, place delicate areas, such as asparagus tips, toward the center of the turntable.

SHIELDING

Shield food with narrow strips of aluminum foil to prevent overcooking. Areas that need shielding include poultry wing tips, the ends of poultry legs, and corners of square baking dishes. Use only small amounts of aluminum foil. Larger amounts can damage your oven.

TURNING

Turn foods over midway through cooking to expose all parts to microwave energy. This is especially

important with large foods such as roasts.

STANDING

Foods cooked in the microwave build up internal heat and continue to cook for a few minutes after heating stops. Let foods stand to complete cooking, especially foods such as cakes and whole vegetables. Roasts need this time to complete cooking in the center without overcooking the outer areas. All liquids, such as soup or hot chocolate, should be shaken or stirred when cooking is complete. Let liquids stand a moment before serving. When heating baby food, stir well at removal and test the temperature before serving.

ADDING MOISTURE

Microwave energy is attracted to water molecules. Food that is uneven in moisture content should be covered or allowed to stand so that the heat disperses evenly. Add a small amount of water to dry food to help it cook.

SPECIFICATIONS

Power Consumption:	120V~60Hz, 1350W (Microwave)
Output:	900W
Operation Frequency:	2450MHz
Outside Dimensions(H×W×D):	12×19×14 5/8 in.
Oven Cavity Dimensions(H×W×D):	8 11/16×13 3/8×12 5/8 in.
Oven Capacity:	0.9 cu.ft
Cooking Uniformity:	Turntable System
Net Weight:	Approx. 30.0lb.

PART NAMES

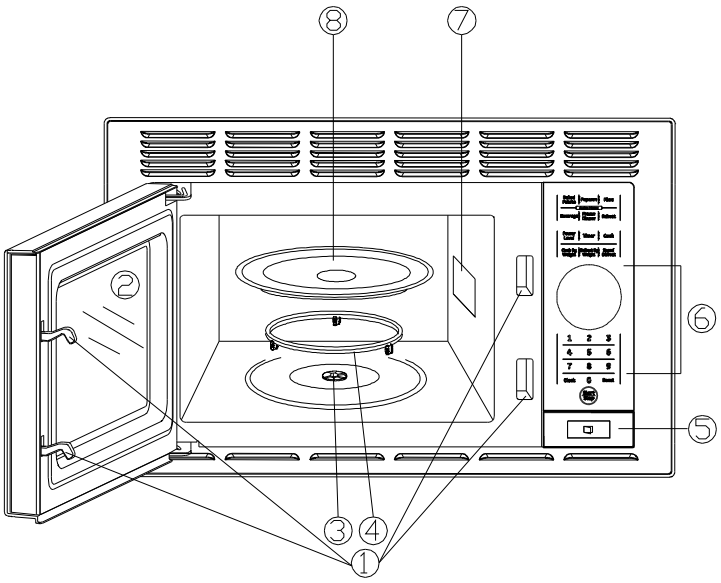

1. Door Safety Lock System
2. Oven Window
3. Shaft
4. Roller Ring
5. Door Release Button
6. Control Panel
7. Wave Guide (Please do not remove the mica plate covering the wave guide)
8. Glass Tray

CONTROL PANEL

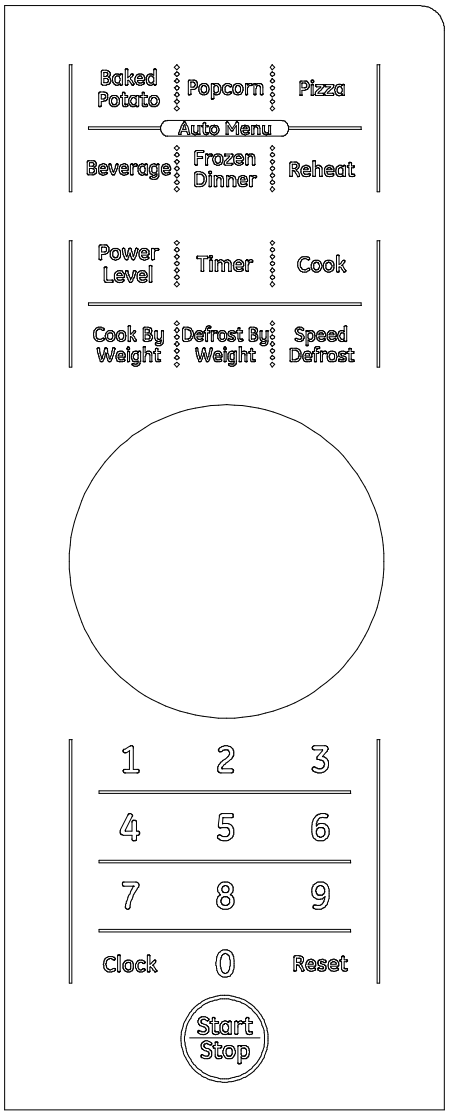

- **QUICK COOK BUTTONS**
  Instant settings to cook popular foods
- **POWER LEVEL**
  Use to set microwave power levels.
- **TIMER**
  Timer functions independently, even while a cooking program is in process.
- **COOK**
  Use for multi-stage cooking. It enables cooking at multiple power and time settings automatically.
- **COOK BY WEIGHT**
  Programmed cooking based on weight of foods.
- **DEFROST BY WEIGHT**
  Programmed defrosting based on the weight of the foods to be defrosted.
- **SPEED DEFROST**
  Speed defrost function that alternates defrost and stand times to quickly and effectively defrost foods.
- **MENU ACTION SCREEN**
  Cooking time, power, indicators and present time are displayed.
- **NUMBER PADS(0-9)**
  Touch to set time or amount.
- **CLOCK**
  Touch to set the clock time.
- **RESET**
  Touch to clear all previous settings.
- **START/STOP**
  Touch to start or stop cooking.

OPERATION INSTRUCTIONS

- When setting a program, you can get the oven return to the standby mode after pressing RESET pad.
- During cooking, you can pause the program by pressing START/STOP pad once, and then press it again to resume or press RESET pad again to cancel it.
- After finishing a cooking program, the system will remind you once for every 2 minutes until you press any pad or open the oven door.

SETTING THE CLOCK

1. In standby mode, touch CLOCK pad.
2. Use the number pads to enter the correct time.
3. Touch CLOCK pad again.

NOTE:

• This is a 12 hour clock. When the oven is first plugged in or when power resumes after a power interruption, the display will show ENTER CLOCK TIME. If you prefer not to have the clock displayed, touch RESET pad. During cooking, you can view the clock time by pressing CLOCK pad.

SETTING THE TIMER

1. Touch TIMER pad.
2. Enter the amount of time by touching the number pads.
3. Touch START/STOP pad.

NOTE:

• The maximum time you can enter is 99 minutes and 99 seconds.

• Time countdown can be seen in display for 5 seconds before clock or cooking time is returned to display.

• Touch TIMER and then touch RESET to cancel TIMER during timing process.

SETTING A COOKING PROGRAM

A. One-stage Cooking

1. Use the number pads to set a cooking time. The longest cooking time is 99 minutes and 99 seconds.
2. If you want to set a power level other than 100% power, touch POWER LEVEL, and then use the number pads to enter the power level.
3. Touch START/STOP to start cooking.

Use single digit to set a cooking power level:

Number pad	Cooking power
1, 0	100%
9	90%
8	80%
7	70%
6	60%
5	50%
4	40%
3	30%
2	20%
1	10%
0	0%

B. Two-stage Cooking

Some recipes require different stages of cooking at different temperatures.

1. SET STAGE 1:

Follow steps 1 and 2 in “One-stage Cooking”. DO NOT TOUCH START/STOP.

2. SET STAGE 2:

Touch COOK pad then enter proper cooking time and (lower) power level. (Most 2-stage recipes use lower power for second stage.)

3. Touch START/STOP pad.

NOTE: During cooking, you can check the cooking power by pressing POWER LEVEL pad.

SPEED DEFROST

1. Touch SPEED DEFROST pad.

2. Enter desired defrosting time by touching correct number pads.

3. Touch START/STOP pad.

NOTE:

• After setting SPEED DEFROST, oven can be programmed to automatically switch to one or two-stage cooking.

• For speed defrost and one stage cooking, follow steps above. Before touching START/STOP, touch COOK, enter time and power level, then touch START/STOP pad.

• For speed defrost and two stage cooking, follow steps above. Before touching START/STOP, enter two-stage cooking programs.

• The longest defrosting time is 99 minutes and 99 seconds. During cooking, the oven will pause and beep to remind you to turn food over, and then press START/STOP pad to resume.

• During defrosting, the system will pause automatically and sound to remind user to turn meat over. After that, touch START/STOP pad to resume cooking.

COOK BY WEIGHT

1. Touch COOK BY WEIGHT pad.
2. Enter the one digit code by touching the correct number pad (1~3).
3. Enter the weight of food by touching correct number pads.
4. Touch START/STOP pad.

Cook By Weight Code Description:

CODE	TYPE	MAX WEIGHT
1	Beef	5 LB 04 OZ
2	Mutton	5 LB 04 OZ
3	Pork	5 LB 04 OZ

Note: During cooking, the system will pause automatically and sound to remind user to turn meat over. After that, touch START/STOP pad to resume cooking.

DEFROST BY WEIGHT

1. Touch DEFROST BY WEIGHT pad.
2. Enter the weight of food by touching correct number pads.
3. Touch START/STOP pad.

NOTE: The maximum weight is 5 LB 04 OZ. During defrosting, the system will pause automatically and sound to remind user to turn meat over. After that, touch START/STOP pad to resume cooking.

SETTING CHILD LOCK

The safety lock prevents unsupervised operation by children.

To set, press and hold RESET pad for 3 seconds. Lock indicator will appear on the display, and the oven can not be operated.

To cancel, press and hold RESET pad for 3 seconds. Lock indicator will disappear.

QUICK COOK SETTINGS

The QUICK COOK settings allow you to cook or reheat food automatically without entering power level or time.

For smaller portions, simply touch the applicable pad and start. For larger portions, press the pad twice.

FROZEN DINNER, BAKED POTATO and BEVERAGE allow you to cook multiple amounts of the same food.

POPCORN

1. Touch POPCORN once.
   POPCORN automatically sets the cooking time for a 3.5 oz. bag of microwave popcorn.
2. Touch START/STOP pad.

To change the preset POPCORN time:

1. Touch POPCORN twice.
2. Use number pads to enter minutes and seconds.
3. Touch START/STOP pad.

NOTE: The longest cooking time is 99 minutes and 99 seconds. The new cooking time will remain whenever you use the POPCORN setting until you reset it or when the oven is unplugged.

BAKED POTATO

For potatoes (4 to 6 oz. per entries):

1. Touch BAKED POTATO once.
2. Enter number of potatoes by touching number pads from 1 to 4.
3. Touch START/STOP pad.

For the large potatoes (8 to 10 oz. per entries):

1. Touch BAKED POTATO twice.
2. Enter number of potatoes by touching number pads from 1 to 4.
3. Touch START/STOP pad.

PIZZA

Reheating a slice of pizza:

1. Touch PIZZA once.
2. Touch START/STOP pad.

Heating a whole pizza:

1. Touch PIZZA twice.
2. Touch START/STOP pad.

BEVERAGE

For coffee cups (5 to 7 oz. per share):

1. Touch BEVERAGE once.
2. Enter number of cups by touching number pads from 1 to 4.
3. Touch START/STOP pad.

For the larger coffee cups (9 to 11 oz. per share)

1. Touch BEVERAGE twice.
2. Enter number of cups by touching number pads from 1 to 4.
3. Touch START/STOP pad.

FROZEN DINNER

For small (7 to 9 oz. per share) frozen dinners:

1. Touch FROZEN DINNER once.
2. For 1 entree or 2 entrees, touch the number pad “1” or “2”
3. Touch START/STOP pad.

Microwaving larger (10 to 12 oz. per share) frozen dinners:

1. Touch FROZEN DINNER twice.
2. For 1 entree or 2 entrees, touch the number pad “1” or “2”:
3. Touch START/STOP pad.

REHEAT

For a plate of cooled food:

1. Touch REHEAT pad.
2. Touch START/STOP pad.

CLEANING AND CARE

1. Turn off the oven and remove the power plug from the wall socket before cleaning.
2. Keep the inside of the oven clean. When food splatters or spilled liquids adhere to oven walls, wipe with a damp cloth. Mild detergent may be used if the oven gets very dirty. Avoid the use of spray and other harsh cleaners as they may stain, streak or dull the door surface.
3. The outside surfaces should be cleaned with a damp cloth. To prevent damage to the operating parts inside the oven, water should not be allowed to seep into the ventilation openings.
4. Wipe the window on both sides with a damp cloth to remove any spills or spatters.
5. Do not allow the control panel to become wet. Clean with a soft, damp cloth. When cleaning the control panel, leave oven door open to prevent oven from accidentally turning on.
6. If steam accumulates inside or around the outside of the oven door, wipe with a soft cloth. This may occur when the microwave oven is operated under high humidity conditions. In such case, it is normal.
7. It is occasionally necessary to remove the glass tray for cleaning. Wash the tray in warm sudsy water or in a dishwasher.
8. The roller ring and oven floor should be cleaned regularly to avoid excessive noise. Simply wipe the bottom surface of the oven with mild detergent. The roller ring may be washed in mild sudsy water or dishwasher. When removing the roller ring from cavity floor for cleaning, be sure to replace in the proper position.
9. Remove odors from your oven by combining a cup of water with the juice and skin of one lemon in a deep microwaveable bowl, microwave for 5 minutes. Wipe thoroughly and dry with a soft cloth.
10. When it becomes necessary to replace the oven light, please consult a dealer to have it replaced.
11. The oven should be cleaned regularly and any food deposits removed. Failure to maintain the oven in a clean condition could lead to deterioration of the surface that could adversely affect the life of the appliance and possibly result in a hazardous situation.
12. Please do not dispose this appliance into the domestic rubbish bin, it should be disposed to the particular disposal center provided by the municipalities.



FURRION®

Furrion, LLC (Furrion) are wholly owned subsidiaries of Lippert Components, Inc. (Lippert)
Furrion, LLC: 52567 Independence Ct., Elkhart, IN, 46514

Furrion Innovation Center & Institute of Technology
22244 Innovation Drive, Elkhart, IN 46514-5514, USA
Toll free:1-800-789-3341
Email: customerservice@lci1.com

©2007-2025 Furrion, LLC. All rights reserved.
For Patent Info: www.Lippert.com/patents

SUPPORT.LCI1.COM/FURRION

LIPPERT®

The contents of this manual are proprietary and copyright protected by Lippert. Lippert prohibits the copying or dissemination of portions of this manual unless prior written consent from an authorized Lippert representative has been provided.
Any unauthorized use shall void any applicable warranty.
The information contained in this manual is subject to change without notice and at the sole discretion of Lippert. Revised editions are available for free download from lippert.com.

Please recycle all obsolete materials.

For all concerns or questions, please contact Lippert.
Ph: 432-LIPPERT (432-547-7378) | Web: lippert.com | Email: customerservice@lci1.com

CCD-0009655 Rev. 01-28-25