GREYSTONE

Model: D100N30ASPRIII-B5-FR01

Lippert PN: 2022302118

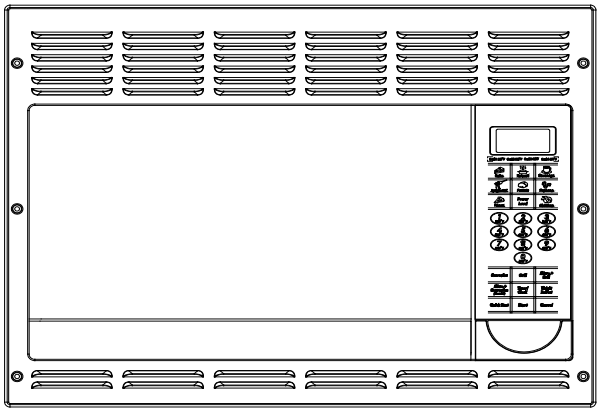

Microwave Oven User's manual

Please read these instructions carefully before installing and operating the oven.

Record in the space below the SERIAL NO. found on the nameplate on your oven and retain this information for future reference.

SERIAL NO.

Please save sales receipt for warranty.

PRECAUTIONS TO AVOID POSSIBLE EXPOSURE TO EXCESSIVE MICROWAVE ENERGY

1. Do not attempt to operate this oven with the door-open since open-door operation can result in harmful exposure to microwave energy. It is important not to defeat or tamper with the safety interlocks.
2. Do not place any object between the oven front face and the door or allow soil or cleaner residue to accumulate on sealing surfaces.
3. Do not operate the oven if it is damaged. It is particularly important that the oven door close properly and that there is no damage to the:

a) Door (bent),

b) Hinges and latches (broken or loosened),

c) Door seals and sealing surfaces.

4. The oven should not be adjusted or repaired by anyone except properly qualified service personnel.

CONTENT

PRECAUTIONS TO AVOID POSSIBLE EXPOSURE TO EXCESSIVE MICROWAVE ENERGY ····· 1
IMPORTANT SAFETY INSTRUCTIONS 2
INSTALLATION GUIDE 4
GROUNDING INSTRUCTIONS 4
UTENSILS GUIDE 5
COOKING TECHNIQUES 6
SPECIFICATIONS 7
PART NAMES 7
CONTROL PANEL 8
HOW TO SET THE OVEN CONTROLS 9
- Setting the clock 9
- Microwave cooking 9
- Grill cooking 10
- Microwave+Grill 10
- Convection 10
- Micro+Convection 11
- Weight defrost 11
- Setting the timer 12
- Quick start 12
- Multi-stage Cooking 12
- Menu Cook 13
- Child Proof Lock 13
- Automatic Protection Mechanism 13

CLEANING AND CARE 14

IMPORTANT SAFETY INSTRUCTIONS

When using electrical appliances, basic safety precautions should be followed, including the following:
WARNING - To reduce the risk of burns, electric shock, fire, and injury to persons or exposure to excessive microwave energy:

1. Read all instructions before using the appliance.
2. Read and follow the specific "PRECAUTIONS TO AVOID POSSIBLE EXPOSURE TO EXCESSIVE MICROWAVE ENERGY" on page4
3. This appliance must be grounded. Connect only to properly grounded outlet. See "GROUNDING INSTRUCTIONS" on page 5
4. Install or locate this appliance only in accordance with the provided installation instructions.
5. Some products such as whole eggs and sealed containers -for example, closed glass jars- are able to explode and should not be heated in this oven.
6. Use this appliance only for its intended use as described in this manual. Do not use corrosive chemicals or vapors in this appliance. This type of oven is specifically designed to heat, cook, or dry food. It is not designed for industrial or laboratory use.
7. As with any appliance, close supervision is necessary when used by children.
8. To reduce the risk of fire in the oven cavity:

a) Do not overcook food. Carefully attend appliance when paper, plastic, or other combustible materials are placed inside the oven to facilitate cooking.
b) Remove wire twist-ties from paper or plastic bags before placing bag in oven.
c) If materials inside the oven should ignite, keep oven door closed, turn oven off, and disconnect the power cord or shut off power at the fuse or circuit breaker panel.
d) Do not use the cavity for storage purposes. Do not leave paper products, cooking utensils or food in the cavity when not in use.

9. Liquids, such as water, coffee, or tea can be overheated beyond the boiling point without appearing to be boiling due to surface tension of the liquid. Visible bubbling or boiling when the container is removed from the microwave oven is not always present. THEIS COULD RESULT IN VERY HOT LIQUIDS SUDDENLY BOILING OVER WHEN A SPOON OR OTHER UTENSIL IS INSERTED INTO THE LIQUID. To reduce the risk of injury to person:

a) Do not overheat the liquid.
b) Stir the liquid both before and halfway through heating it.
c) Do not use straight-sided containers with narrow necks.
d) After heating, allow the container to stand in the microwave oven for a short time before removing the container.
e) Use extreme care when inserting a spoon or other utensil into the container.

10. Do not heat oil or fat for deep-frying. It is difficult to control the temperature of oil in microwave oven.
11. Pierce foods with heavy skins such as potatoes, whole squash, apples and chestnuts before cooking.
12. The contents of feeding bottles and baby jars should be stirred or shaken and the temperature should be checked before serving in order to avoid burns.
13. Cooking utensils may become hot because of heat transferred from the heated food. Potholders

may be needed to handle the utensil.

14. Do not cover or block any openings on the appliance.
15. Do not store or use this appliance outdoors. Do not use this product near water, for example, near a kitchen sink, in a wet basement, near a swimming pool, or similar locations.
16. Do not operate this appliance if it has a damaged cord or a plug, if it is not working properly or if it has been damaged or dropped.
17. Do not immerse cord or plug in water. Keep cord away from heated surface. Do not let cord hang over edge of table or counter.
18. Use only thermometers, which are specifically designed for use in microwave ovens.
19. Do not operate any heating or cooking appliance beneath this appliance.
20. Be certain the glass tray and roller rings are in place when you operate the oven
21. This appliance should be serviced only by qualified service personnel, contact nearest authorized service facility for examination, repair, or adjustment.
22. When cleaning surfaces of door and oven that comes together on closing the door, use only mild, nonabrasive soaps, or detergents applied with a sponge or soft cloth.
23. This equipment generates, uses and can radiate radio frequency energy and, if not installed and used in accordance with the instructions, may cause harmful interference to radio communications. However, there is no guarantee that interference will not occur in a particular installation. If this equipment does cause harmful interference to radio or television reception, which can be determined by turning the equipment off and on, the user is encouraged to try to correct the interference by one or more of the following measures:

- Reorient or relocate the receiving antenna.
- Increase the separation between the equipment and receiver.
- Connect the equipment into an outlet on a circuit different from that to which the receiver is connected.
- Consult the dealer or an experienced radio/TV technician for help.

SAVE THESE INSTRUCTIONS

INSTALLATION GUIDE

1. Make sure that all the packing materials are removed from the inside of the door.
2. Check the oven for any damage, such as misaligned or bent door, damaged door seals and sealing surface, broken or loose door hinges and latches and dents inside the cavity or on the door. If there is any damage, do not operate the oven but contact qualified service personnel.
3. This microwave oven must be placed on a flat, stable surface to hold its weight and the heaviest food likely to be cooked in the oven.
4. Do not place the oven where heat, moisture, or high humidity are generated, or near combustible materials.
5. For correct operation, the oven must have sufficient airflow. Allow 20cm of space above the oven, 10cm at back and 5cm at both sides. Do not cover or block any openings on the appliance. Do not remove feet on which oven stands.
6. Do not operate the oven without glass tray, roller support, and shaft in their proper positions.
7. Make sure that the power supply cord is undamaged and does not run under the oven or over any hot or sharp surface.
8. The socket must be readily accessible so that it can be easily unplugged in an emergency.

GROUNDING INSTRUCTIONS

This appliance must be grounded. In the event of an electrical short circuit, grounding reduces risk of electric shock by providing an escape wire for the electric current.

WARNING Improper use of the grounding plug can result in a risk of electric shock.

Consult a qualified electrician or serviceman if the grounding instructions are not completely understood, or if doubt exists as to whether the appliance is properly grounded, and either:

1) If it is necessary to use an extension cord, use only a 3-wire extension cord that has a 3-blade grounding plug and a 3-slot receptacle that will accept the plug on the appliance. The marked rating of the extension cord shall be equal to or greater than the electrical rating of the appliance, or 2) Do not use an extension cord. If the power supply cord is too short, have a qualified electrician or serviceman install an outlet near the appliance.

ELECTRICAL REQUIREMENTS

The electrical requirements are a 120 volt 60 Hz, AC only, 20 amp. It is recommended that a separate circuit serving only the oven be provided. The oven is equipped with a 3-prong grounding plug. It must be plugged into a wall receptacle that is properly installed and grounded.

Power Supply Cord

1. A short power supply cord is provided to reduce the risks resulting from becoming entangled in or tripping over a longer cord.
2. Longer cord sets or extension cords are available and may be used if care is exercised in their use.
3. If long cord or extension cord is used：

a) The marked electrical rating of the cord set or extension cord should be at least as great as the electrical rating of the appliance.

b) The extension cord must be a grounding-type 3-wire cord, and The longer cord should be arranged so that it will not drape over the counter top or table top where it can be pulled on by children or tripped

over unintentionally.

Notes:

If you have any questions about the grounding or electrical instructions, consult a qualified electrician or service person.

Neither manufacturer nor the dealer can accept any liability for damage to the oven or personal injury resulting from failure to observe the electrical connection procedures.

Radio or TV Interference

Should there be any interference caused by the microwave oven to your radio or TV, check that the microwave oven is on a different circuit, relocated the radio or TV as far away from the oven as feasible or check position and signal of receiving antenna.

This section lists which utensils can be used in the microwave, which ones have limited use for short periods, and which ones should not be used in the microwave.

UTENSILS GUIDE

✓ RECOMMENDED

Microwave browning dish — Use to brown the exterior of small items such as steaks, chops, or pancakes. Follow the directions provided with your browning dish.

Microwaveable plastic wrap — Use to retain steam. Leave a small opening for some steam to escape and avoid placing it directly on the food.

Paper towels and napkins — Use for short-term heating and covering; these absorb excess moisture and prevent spattering. Do not use recycled paper towels, which may contain metal and could ignite.

Glass and glass-ceramic bowls and dishes — Use for heating or cooking.

Paper plates and cups — Use for short-term heating at low temperatures. Do not use recycled paper, which may contain metal and could ignite.

Wax paper — Use as a cover to prevent spattering.

Thermometers — Use only those labeled "Microwave Safe" and follow all directions. Check the food in several places. Conventional thermometers may be used on microwave food once the food has been removed from the oven.

⚠ LIMITED USE

Aluminum foil — Use narrow strips of foil to prevent overcooking of exposed areas. Using too much foil can damage your oven, so be careful. You should keep distance of 1 inch (2.54cm) between aluminum foil and cavity.

Ceramic, porcelain, and stoneware— Use these if they are labeled "Microwave Safe". If they are not labeled, test them to make sure they can be used safely.

Plastic — Use only if labeled "Microwave Safe". Other plastics can melt.

✗ Not Recommended

Glass jars and bottles — Regular glass is too thin to be used in a microwave. It can shatter and cause damage and injury.

Paper bags — These are a fire hazard, except for popcorn bags that are designed for microwave use.

Styrofoam plates and cups — These can melt and leave an unhealthy residue on food.

Plastic storage and food containers — Containers such as margarine tubs can melt in the microwave.

Metal utensils — These can damage your oven. Remove all metal before cooking.

Note:
Should you wish to check if a dish is safe for microwaving, place the empty dish in the oven and microwave on HIGH for 30 seconds. A dish which becomes very hot should not be used.

COOKING TECHNIQUES

Your microwave makes cooking easier than conventional cooking, provided you keep these considerations in mind:

STIRRING

Stir foods such as casseroles and vegetables while cooking to distribute heat evenly. Food at the outside of the dish absorbs more energy and heats more quickly, so stir from the outside to the center. The oven will turn off when you open the door to stir your food.

ARRANGEMENT

Arrange unevenly shaped foods, such as chicken pieces or chops, with the thicker, meatier parts toward the outside of the turntable where they receive more microwave energy. To prevent overcooking, place delicate areas, such as asparagus tips, toward the center of the turntable.

SHIELDING

Shield food with narrow strips of aluminum foil to prevent overcooking. Areas that need shielding include poultry wing tips, the ends of poultry legs, and corners of square baking dishes. Use only small amounts of aluminum foil. Larger amounts can damage your oven.

TURNING

Turn foods over midway through cooking to expose all parts to microwave energy. This is especially important with large foods such as roasts.

STANDING

Foods cooked in the microwave build up internal heat and continue to cook for a few minutes after heating stops. Let foods stand to complete cooking, especially foods such as cakes and whole vegetables. Roasts need this time to complete cooking in the center without overcooking the outer areas. All liquids, such as soup or hot chocolate, should be shaken or stirred when cooking is complete. Let liquids stand a moment before serving. When heating baby food, stir well at removal and test the temperature before serving.

ADDING MOISTURE

Microwave energy is attracted to water molecules. Food that is uneven in moisture content should be covered or allowed to stand so that the heat disperses evenly. Add a small amount of water to dry food to help it cook

SPECIFICATIONS

Power Consumption:	120V/60Hz, 1500W (Microwave)
	1600W (Convection)
	1250W (Grill)
Output:	1000W
Operation Frequency:	2450MHz
Outside Dimensions(H×W×D):	18 2/16×24 3/16×15 9/16in.
Oven Cavity Dimensions(H×W×D):	9 7/16×13 15/16×14 1/8 in.
Oven Capacity:	1.1 cu.ft
Cooking Uniformity:	Turntable System
Net Weight:	Approx. 41 lb.

PART NAMES

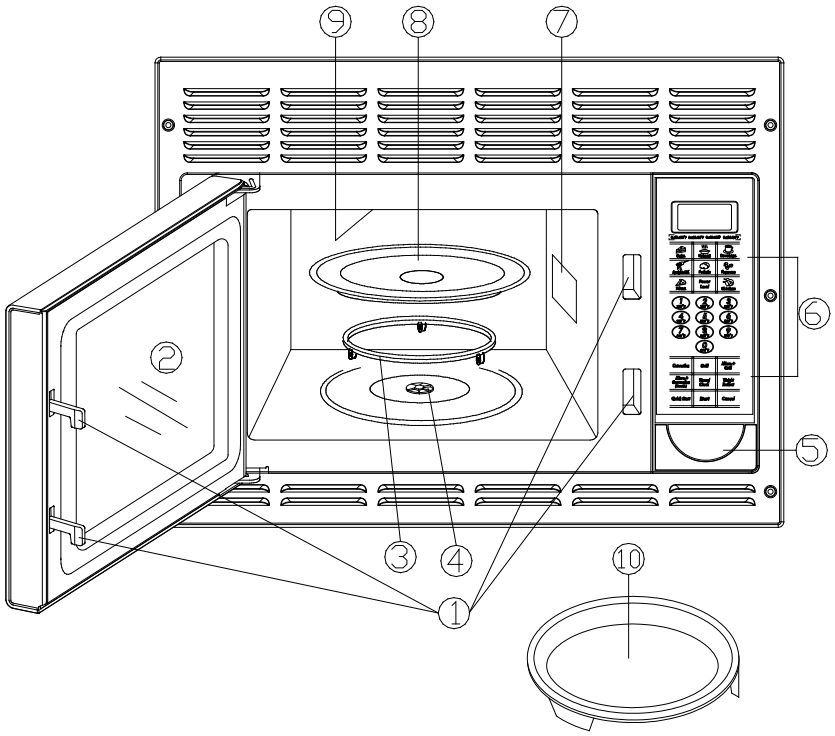

1. Door Safety Lock System
2. Oven Window
3. Roller Ring
4. Shaft
5. Door Release Button
6. Control Panel
7. Wave Guide (Please do not remove the mica plate covering the wave guide)
8. Glass Tray
9. Grill Heater
10. Baking Plate

CCD-0009741 Rev. 03-13-25

CONTROL PANEL



DISPLAY WINDOW

Use to indicate clock, cooking time, etc.

QUICK COOK BUTTONS:

CAKE, POTATO, POPCORN, BEVERAGE, PIZZA, CHICKEN, REHEAT, SPAGHETTI

POWER LEVEL

Press to select microwave power level.

NUMBER PADS

Use to enter clock, cooking time, temperature, etc.

CONVECTION

Press to program convection cooking.

GRILL

Press to set a grill-cooking program.

MICRO + GRILL

Press to select one of two combination cooking settings.

MICRO + CONVECTION (Combi.)

Press to select one of four combination cooking settings.

TIMER/CLOCK

Use to set the clock and the oven timer.

WEIGHT DEFROST

Touch to defrost food by weight.

QUICK START

Touch to start the oven quickly at full power.

START

Press to start cooking program.

CANCEL

Touch to stop cooking program or clear all previous settings before cooking starts.

CCD-0009741 Rev. 03-13-25

HOW TO SET THE OVEN CONTROLS

- When the oven first plugged in, beep will sound and the display will show and “1:00”.
- During the setting mode, the system will return to waiting mode if there is not any operation within 20 seconds.
- During cooking, if press CANCEL pad once or open the door, the program will be paused, then press START pad to resume, but if press CANCEL pad twice, the program will be canceled.
- After ending cooking, the screen will display End with sound every two minutes until user press any pad or open the door.
- The electronically controlling system of the microwave oven has the feature of cooling. As for any cooking mode which cooking time above 2 minutes, after finishing cooking or the cooking program is paused, the oven fan will work about 3 minutes automatically to cool the oven for prolonging the life of the oven.

SETTING THE CLOCK

This is a 12 and 24 hour clock. You can choose it by touching TIMER/CLOCK pad.

1. Press and hold TIMER/CLOCK for 3 sec to set 24 hour clock, or press TIMER/CLOCK pad again to set 12 hour clock.
2. Use the numeric pads to enter clock time
3. Press TIMER/CLOCK to confirm.

MICROWAVE COOKING

The longest cooking time is 99 minutes and 99 seconds.

Microwave cooking allows you to customize cooking power and time. First, select a power level by pressing the POWER LEVEL pad (see the table below). Then set the cooking time using the numeric pads, before pressing the START pad.

Press POWER LEVEL pad to select cooking power		
Press	Power	Description
Once	100%(P-HI)	High
Twice	90%(P-90)	
3 times	80%(P-80)	
4 times	70%(P-70)	Medium High
5 times	60%(P-60)	
6 times	50%(P-50)	Medium
7 times	40%(P-40)	
8 times	30%(P-30)	Med. Low
9 times	20%(P-20)	
10 times	10%(P-10)	Low

11 times	0% (P-00)	

Suppose you want to cook for 5 minute at 60% power level.

1. Press POWER LEVEL button to set 60% power.
2. Press number pads to enter cooking time until the correct cooking time (5:00) is displayed.
3. Press START pad.

NOTE: If you want to cook at full power level, omit the first step. During cooking you can check the cooking power level by touching POWER LEVEL pad.

GRILL COOKING

The longest cooking time is 99 minutes and 99 seconds.

Grill cooking is particularly useful for thin slices of meat, steaks, chops, kebabs, sausages and pieces of chicken. It is also suitable for hot sandwiches and au gratin dishes.

Suppose you want to program grill cooking for 12 minutes.

1. Press GRILL button.
2. Use the number pads to enter cooking time.
3. Press START button.

MICROWAVE+GRILL

The longest cooking time is 99 minutes and 99 seconds.

This feature allows you to combine grill and microwave cooking on two different settings. First, press this button once or twice to choose a proper combination setting, then, enter the desired cooking time. After you have pressed the START button, the system begins to count down.

COMBINATION 1

30% of time for microwave cooking, 70% for grill cooking. Use for fish, potatoes or au gratin.

Suppose you want to set combination 1 cooking for 25 minutes.

1. Press MICRO+GRILL button once.
2. Use the number pads to enter 25:00.
3. Press START button.

COMBINATION 2

55% of time for microwave cooking, 45% for grill cooking. Use for pudding, omelets, baked potatoes and poultry.

Suppose you want to set combination 2 cooking for 12 minutes.

1. Press MICRO+GRILL button twice.
2. Use the number pads to enter 12:00.
3. Press START button.

CONVECTION

The longest cooking time is 99 minutes and 99 seconds.

During convection cooking, hot air is circulated throughout the oven cavity to make crisp foods quickly and evenly. This oven can be programmed for ten different cooking temperatures. You can press CONVECTION to check cooking temperature during cooking.

To Cook with Convection

To cook with convection, press CONVECTION pad once and then press the number pads to enter the desired convection temperature.

Suppose you want to cook at 320℉ for 40 minutes.

1. Press CONVECTION pad
2. Press number pad 6.
3. Press number pads to enter cooking time.
4. Press START pad.

To Preheat and Cook with Convection

Your oven can be programmed to combine preheating with convection cooking operations.

Suppose you want to preheat to 340℉ and then cook 30 minutes.

1. Press CONVECTION.
2. Press number pad 7 to indicate convection temperature 340℉.
3. Press START button. Preheat temperature reach the specified temperature beep will sound pre 5 seconds to remind user put food into the oven.
4. Open the door and place container of food at the center of the turntable.
5. Use the number pads to enter cooking time.
6. Press START button

NOTE: The preheat time is 30 minutes and the time cannot be set.

MICRO+CONVECTION

The longest cooking time is 99 minutes and 99 seconds.

This oven has four pre-programmed settings that make it easy to cook with both convection heat and microwave automatically.

	Number	Temperature (℉)
COMB1	1	230
COMB2	2	285
COMB3	3	340
COMB4	4	390

Suppose you want to bake food for 24 minutes on COMB3.

1. Press MICRO+CONVECTION button once.
2. Use the number pads 1-4 to enter convection temperature. In this case, press number pad 3
3. Use the number pads to enter cooking time as desired
4. Press START button to start.

NOTE: You can check the convection temperature by pressing the MICRO+CONVECTION button during cooking.

WEIGHT DEFROST

The oven can defrost food based on the weight you entered. You can set the weight from 4 oz to 3 LB 15oz.

Suppose you want to defrost 11oz frozen meat.

1. Press WEIGHT DEFROST button continuous to choose 11 oz.

2. Press START button.

NOTE: Defrost power divides into three stages, each stage needs 1/3 time, after defrosting 2/3 time the system will sound to remind you to turn over the food and pause until you press the button START to enter into the next defrosting stage, and the system resume .

SETTING THE TIMER

To use the timer feature, when you need to be reminded of the cooking or some other things,

1. Press TIMER/CLOCK button once.
2. Use the number pads to enter the time to be counted down. The longest time you can set is 99 minutes and 99 seconds.
3. Press START button.

NOTE: When the countdown ends, the system buzzer will beep. Time countdown can be seen in display for 5 seconds by touching TIMER/CLOCK pad and then press CANCEL pad can cancel the program when the display show the time.

QUICK START

Use this feature to program the oven to microwave food at 100% power conveniently.

Press QUICK START button in quick succession to set the cooking time. The oven will auto-start immediately. The longest time you can set is 10 minutes.

MULTI-STAGE COOKING

Your oven can be programmed for up to 2 automatic cooking sequences.

Suppose you want to set the following cooking program.

Microwave cooking

↓

Convection cooking

1. Press POWER LEVEL button to set power level.
2. Use the number pads to enter cooking time.
3. Press CONVECTION pad once.
4. Use the number pads to enter convection temperature.
5. Use the number pads to enter convection cooking time.
6. Press START button.

NOTE: Weight Defrost, Quick Start and Menu Cook cannot be set in a multi-stage cooking program.

MENU C OK

or food o the following cooking mode, it is not necessary to program the time and the cooking power. It is sufficient to indicate the type of food that you want to cook as well as the weight of this food.

1 P ess corresponding menu pads once or repeatedly to select the weight or the amount of food to be cooked.

2 P ess START.

Auto Cook Code/Menu

Press Food Icons	Notes
Cake (1lb)	1. The user is required to set weight or the amount, then the system will set the needed time accordingly. 2. For food 8 (chicken), beeps can be heard during cooking to remind user to turn food over. 3. Voltage fluctuation may cause food not done well, in such case, adjust the cooking time manually. 4. For cake and popcorn, there is only one option.
Reheat(oz)	
Beve age(200ml/cup)	
Spaghetti(oz)	
Potato(share)	
Popco n (3.5 oz)	
Pizza(oz)	
Chicken(oz)	

CHILD PROOF LOCK

The child proof lock prevents unsupervised operation by little children.

To set the child proof lock: Press CANCEL button for 3 seconds, then a beep will sound and the indicato light will turn on. In the lock state, all buttons are disabled.

To cancel the child proof lock: Press CANCEL button for 3 seconds, then a beep will sound and the indicator light will turn off.

AUT MATIC PROTECTION MECHANISM

1 Digital tube has been shows "E 01" and had been "DE" alarm when the system into the super high tempe ature protection status. The system enters into normal standby mode when faults remove and p ess CANCEL button.

2 Digital tube has been shows "E 02" and had been "DE" alarm when the system enters into the supe low temperature protection status. The system enters into normal standby mode when faults remove and p ess CANCEL button.

3 If the sensor is short circuited, the system enters protection mode with display of "E 03" which, when clea ed, press CANCE to back into normal.

CLEANING AND CARE

1. Turn off the oven and remove the power plug from the wall socket before cleaning.
2. Keep the inside of the oven clean. When food splatters or spilled liquids adhere to oven walls, wipe them with a damp cloth. Mild detergent may be used if the oven gets very dirty. Avoid the use of spray and other harsh cleaners as they may stain, streak or dull the door surface.
3. The outside surfaces should be cleaned with a damp cloth. To prevent damage to the operating parts inside the oven, water should not be allowed to seep into the ventilation openings.
4. Wipe the door and window on both sides, as well as the door seals and adjacent parts frequently with a damp cloth to remove any spills or spatters. Do not use abrasive cleaner.
5. Do not allow the control panel to become wet. Clean with a soft, damp cloth. When cleaning the control panel, leave oven door open to prevent oven from accidentally turning on.
6. If steam accumulates inside or around the outside of the oven door, wipe with a soft cloth. This may occur when the microwave oven is operated under high humidity condition.
7. It is occasionally necessary to remove the glass tray for cleaning. Wash the tray in warm sudsy water or in a dishwasher.
8. The roller ring and oven floor should be cleaned regularly to avoid excessive noise. Simply wipe the bottom surface of the oven with mild detergent. The roller ring may be washed in mild sudsy water or dishwasher. When removing the roller ring from cavity floor for cleaning, be sure to replace in the proper position.
9. Remove odors from your oven by combining a cup of water with the juice and skin of one lemon in a deep microwaveable bowl, microwave for 5 minutes. Wipe thoroughly and dry with a soft cloth.
10. When it becomes necessary to replace the oven light, please consult a dealer to have it replaced.
11. The oven should be cleaned regularly and any food deposits removed. Failure to maintain the oven in a clean condition could lead to deterioration of the surface that could adversely affect the life of the appliance and possibly result in a hazardous situation.
12. Please do not dispose this appliance into the domestic rubbish bin, it should be disposed to the particular disposal center provided by the municipalities.
13. When the microwave oven with grill function is first used, it may produce slight smoke and smell. This is a normal phenomenon, because the oven is made of a steel plate coated with lubricating oil, and the new oven will produce fumes and odor generated by burning the lubricating oil. This phenomenon will disappear after a period of using.



FURRION®

Furrion, LLC (Furrion) are wholly owned subsidiaries of Lippert Components, Inc. (Lippert)
Furrion, LLC: 52567 Independence Ct., Elkhart, IN, 46514

Furrion Innovation Center & Institute of Technology
22244 Innovation Drive, Elkhart, IN 46514-5514, USA
Toll free:1-800-789-3341
Email: customerservice@lci1.com

©2007-2025 Furrion, LLC. All rights reserved.
For Patent Info: www.Lippert.com/patents

SUPPORT.LCI1.COM/FURRION

LIPPERT®

The contents of this manual are proprietary and copyright protected by Lippert. Lippert prohibits the copying or dissemination of portions of this manual unless prior written consent from an authorized Lippert representative has been provided.
Any unauthorized use shall void any applicable warranty.
The information contained in this manual is subject to change without notice and at the sole discretion of Lippert. Revised editions are available for free download from lippert.com.

Please recycle all obsolete materials.

For all concerns or questions, please contact Lippert.
Ph: 432-LIPPERT (432-547-7378) | Web: lippert.com | Email: customerservice@lci1.com