Greystone®
BY FURRION

0.9 CU.FT. MICROWAVE OVEN

(Stainless Steel and Black Finishes)

MODEL (LIPPERT PN)

P90D23AP-X3-FR03 (2022302295) P90D23AP-YX-FR03 (2022302309)

TROUBLESHOOTING AND SERVICE MANUAL

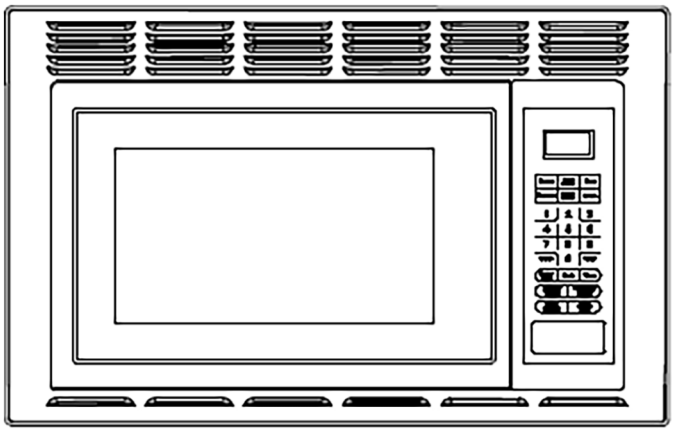

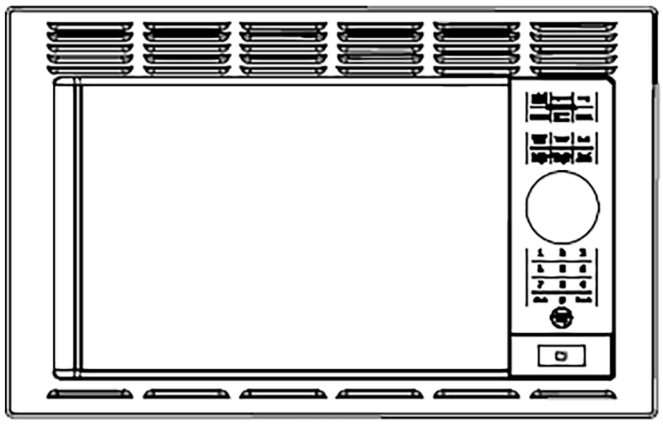

* Picture shown here is for reference only.

This manual contains the product's basic information, safety, maintenance, replaceable parts, fault diagnosis and basic troubleshooting procedures.

TABLE OF CONTENTS

Introduction **2**
Safety **2**
Important Safety Instructions **3**
Precautions to avoid possible exposure to excessive microwave energy 3
Grounding Instructions 3
Electrical Requirements 3
Power Supply Cord 3
Radio or TV Interference 4
Replaceable Parts List **4**
Troubleshooting **5**
If the oven fails to operate: 5
Specification **5**

Introduction

This document provides an overview on replaceable parts for Furrion® Greystone® 0.9 Cu. ft. Microwave Oven, (Stainless Steel and Black Finishes) as well as basic troubleshooting and service information.

NOTE: Images used in this document are for reference only when assembling, installing and/or operating this product. Actual appearance of provided and/or purchased parts and assemblies may differ.

This TSM covers two instruction manuals. For more detailed operation, including general safety instructions, warnings and cautions, see Instruction Manuals at: https://support.lci1.com/documents/ccd-0009655 and https://lci-support-doc.s3.amazonaws.com/greystone_appliances/manuals/ccd-0009656.pdf
or scan the QR codes below

CCD-0009655

CCD-0009656

Safety

Read and understand all instructions before installing or operating this product. Adhere to all safety labels.

This manual provides general instructions. Many variables can change the circumstances of the instructions, i.e., the degree of difficulty, operation and ability of the individual performing the instructions. This manual cannot begin to plot out instructions for every possibility, but provides the general instructions, as necessary, for effectively interfacing with the device, product or system. Failure to correctly follow the provided instructions may result in death, serious personal injury, severe product and/or property damage, including voiding of the Lippert limited warranty.

⚠WARNING

The "WARNING" symbol above is a sign that a procedure has a safety risk involved and may cause death or serious personal injury if not performed safely and within the parameters set forth in this manual.

⚠WARNING

Failure to follow instructions provided in this manual may result in death, serious personal injury and/or severe product and property damage, including voiding of the component warranty.

⚠ CAUTION

The "CAUTION" symbol above is a sign that a safety risk is involved and may cause personal injury and/or product or property damage if not safely adhered to and within the parameters set forth in this manual.

⚠ CAUTION

Always wear eye protection when performing service, maintenance or installation procedures. Other safety equipment to consider would be hearing protection, gloves and possibly a full face shield, depending on the nature of the task.

Important Safety Instructions

Precautions to avoid possible exposure to excessive microwave energy

1. Do not attempt to operate this oven with the door-open since open-door operation can result in harmful exposure to microwave energy. It is important not to defeat or tamper with the safety interlocks.
2. Do not place any object between the oven front face and the door or allow dirt or cleaner residue to accumulate on sealing surface.
3. Do not operate the oven if it is damaged. It is particularly important that the oven door close properly and that there is no damage to the:
   A. Door (bent),
   B. Hinges and latches (broken or loosened),
   C. Door seals and sealing surfaces.
4. The oven should not be adjusted or repaired by anyone except properly qualified service personnel.

Grounding Instructions

This appliance must be grounded. In the event of an electrical short circuit, grounding reduces risk of electric shock by providing an escape wire for the electric current.

⚠ WARNING

Improper use of the grounding plug can result in a risk of electric shock.

Consult a qualified electrician or serviceman if the grounding instructions are not completely understood, or if doubt exists as to whether the appliance is properly grounded, and either:
1) If it is necessary to use an extension cord, use only a 3-wire extension cord that has a 3-blade grounding plug and a 3-slot receptacle that will accept the plug on the appliance. The marked rating of the extension cord shall be equal to or greater than the electrical rating of the appliance, or
2) Do not use an extension cord. If the power supply cord is too short, have a qualified electrician or serviceman install an outlet near the appliance.

Electrical Requirements

The electrical requirements are a 120 volt, 60 Hz, AC only, 15 amp or 20 amp dedicated circuit. It is recommended that a separate circuit serving only the oven be provided. The oven is equipped with a 3-prong grounding plug. It must be plugged into a wall receptacle that is properly installed and grounded.

Power Supply Cord

1. A short power supply cord is provided to reduce the risks resulting from becoming entangled in or tripping over a longer cord.
2. Longer cord sets or extension cords are available and may be used if care is exercised in their use.

3. If long cord or extension cord is used:
   A. The marked electrical rating of the cord set or extension cord should be at least as great as the electrical rating of the appliance.
   B. The extension cord must be a grounding-type 3-wire cord, and the longer cord should be arranged so that it will not drape over the counter top or table top where it can be pulled on by children or tripped over unintentionally.

NOTE: If you have any questions about the grounding or electrical instructions, consult a qualified electrician or service person.

NOTE: Neither manufacturer nor the dealer can accept any liability for damage to the oven or personal injury resulting from failure to observe the electrical connection procedures.

⚠ CAUTION

Cancer and Reproductive Harm – www.P65Warnings.ca.gov

Radio or TV Interference

Should there be any interference caused by the microwave oven to your radio or TV, check that the microwave oven is on a different circuit, relocate the radio or TV as far away from the oven as feasible or check position and signal of receiving antenna.

Replaceable Parts List

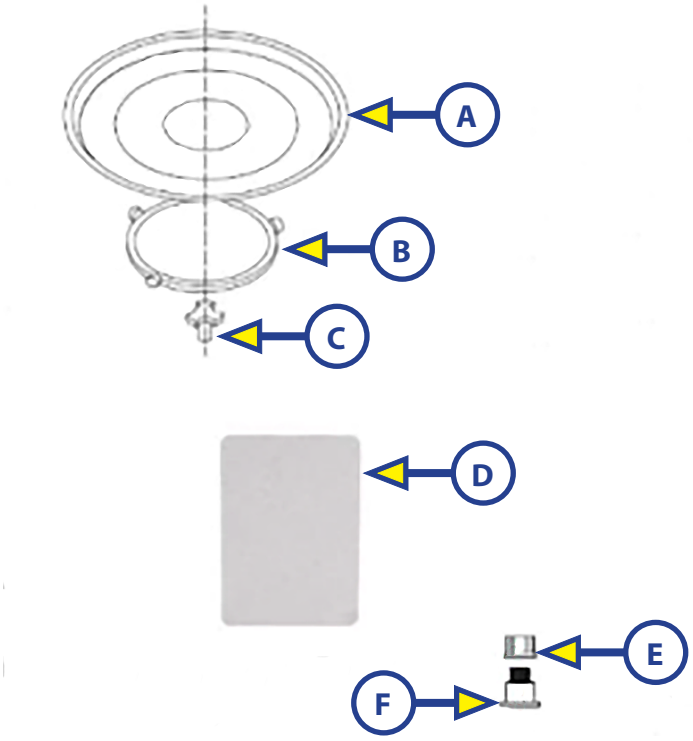

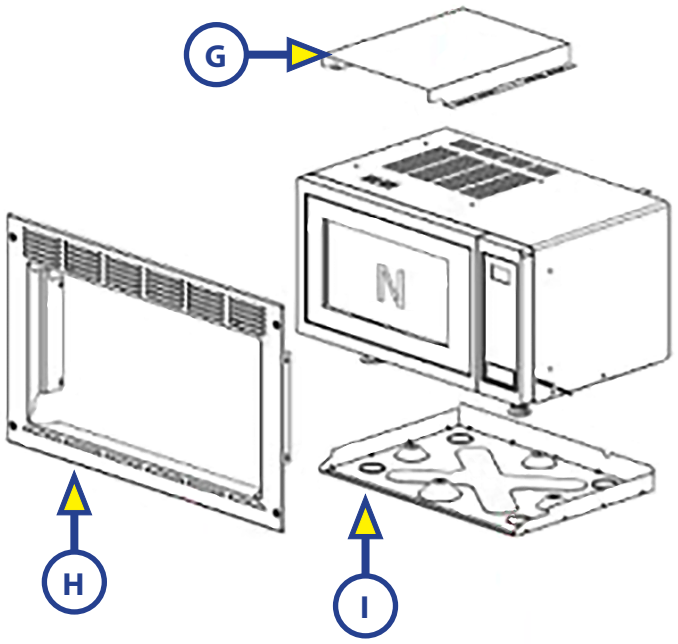

Callout	Part #	Description	Model
A	2023024124	Connector	P90D23AP-YX-FR03, P90D23AP-X3-FR03
B	2023024126	Roller Ring	P90D23AP-YX-FR03, P90D23AP-X3-FR03
C	2023024135	Glass Turntable	P90D23AP-YX-FR03, P90D23AP-X3-FR03
D	2023024140	Wave Guide	P90D23AP-YX-FR03, P90D23AP-X3-FR03
E	2023024144	Foot	P90D23AP-YX-FR03, P90D23AP-X3-FR03
F	2023024150	Foot Decoration	P90D23AP-YX-FR03, P90D23AP-X3-FR03
G	2023024152	Upper Eshaust Guide	P90D23AP-YX-FR03, P90D23AP-X3-FR03
H	2022302236	Trim Kit	P90D23AP-YX-FR03
	2022302235	Trim Kit	P90D23AP-X3-FR03
I	2023024156	Lower Air Duct	P90D23AP-YX-FR03, P90D23AP-X3-FR03

Troubleshooting

If the oven fails to operate:

1. Check to ensure that the oven is plugged in securely. If it is not, remove the plug from the outlet, wait 10 seconds, and plug it in again securely.
2. Check for a blown circuit fuse or a tripped main circuit breaker. If these seem to be operating properly, test the outlet with another appliance.
3. Check to ensure that the control panel is programmed correctly and the timer is set.
4. Check to ensure that the door is securely closed engaging the door safety lock system. Otherwise, the microwave energy will not flow into the oven.

NOTE: IF NONE OF THE ABOVE RECTIFIES THE SITUATION, THEN CONTACT A QUALIFIED TECHNICIAN. DO NOT TRY TO ADJUST OR REPAIR THE OVEN YOURSELF.

Specification

Power Consumption	120V~60Hz, 1350W (MICROWAVE)
Output	900W
Operation Frequency	2450MHz
Outside Dimensions - W x H x D	19" x 12" x 14 5/8" (482mm x 304mm x 371mm)
Oven Cavity Dimensions - W x H x D	13 3/8" x 8 11/16" x 12 5/8" (334mm x 221mm x 321mm)
Oven Capacity	0.9cu.ft (25L)
Cooking Uniformity	Turntable System
Net Weight	Approx. 30lb. (13.61kg)



FURRION®

Furrion, LLC (Furrion) are wholly owned subsidiaries of Lippert Components, Inc. (Lippert)
Furrion, LLC (Furrion) sont des filiales en propriété exclusive de Lippert Components, Inc. (Lippert)
Furrion, LLC (Furrion) son subsidiarias de propiedad total de Lippert Components, Inc. (Lippert)
Furrion, LLC: 52567 Independence Ct., Elkhart, IN, 46514

Furrion Innovation Center & Institute of Technology
Centre d'innovation et institut de technologie Furrion
Centro de Innovación e Instituto de Tecnología Furrion
22244 Innovation Drive, Elkhart, IN 46514-5514, USA
Toll free/Numéro gratuit/Línea telefónica gratuita:1-800-789-3341
Email/Courriel/Correo electrónico: customerservice@lci1.com

©2007-2025 Furrion, LLC. All rights reserved.
©2007-2025 Furrion, LLC. Tous droits réservés.
©2007-2025 Furrion, LLC. Reservados todos los derechos.

For Patent Info: www.Lippert.com/patents
Pour des informations sur les brevets: www.Lippert.com/patents
Para información sobre patentes: www.Lippert.com/patents

SUPPORT.LCI1.COM/FURRION

LIPPERT®

The contents of this manual are proprietary and copyright protected by Lippert. Lippert prohibits the copying or dissemination of portions of this manual unless prior written consent from an authorized Lippert representative has been provided. Any unauthorized use shall void any applicable warranty. The information contained in this manual is subject to change without notice and at the sole discretion of Lippert. Revised editions are available for free download from lippert.com.

Please recycle all obsolete materials.

Les renseignements contenus dans le présent manuel peuvent seulement être distribués sous forme de document complet, à moins de recevoir l'approbation explicite de Lippert Components pour distribuer desparties individuelles. Tous les renseignements contenus dans le présent manuel peuvent être modifiés sans préavis. Les éditions révisées pourront être téléchargées gratuitement sur le site lci1.com. Ces renseignements sont considérés comme étant factuels jusqu'à ce qu'une version révisée les rende désuets.

Veuillez recycler tout le matériel désuet.

El contenido de este manual es propiedad y está protegido por derechos de autor de Lippert. Lippert prohíbe la copia o difusión de partes de este manual a menos que se haya proporcionado el consentimiento previo por escrito de un representante autorizado de Lippert. Cualquier uso no autorizado anulará cualquier garantía aplicable. La información contenida en este manual está sujeta a cambios sin previo aviso y a la exclusiva discreción de Lippert. Las ediciones revisadas están disponibles para su descarga gratuita desde lippert.com.

Recicle todos los materiales obsoletos.

For all concerns or questions, please contact Lippert.
Communiquer avec Lippert Components si vous avez des questions ou des préoccupations.
Si tiene alguna inquietud o pregunta, comuníquese con Lippert.
Ph: 432-LIPPERT (432-547-7378) | Web: lippert.com | Email: customerservice@lci1.com