Trailer Axle Beam
SERVICE MANUAL

TABLE OF CONTENTS

System Information 2
Safety Information 2
Required Resources 2
Hub Removal 3
Axle Beam Replacement 5
Seal Inspection and Replacement 6
Hub Installation 7
Wheel Torque Requirements 10
Notes 11

System Information

This document provides instructions for the inspection, removal and replacement of a worn or damaged axle beam.

NOTE: The images shown in this manual are for illustrative purposes only and may not exactly match the components on the axle being serviced.

NOTE: The owner's manual for the unit being serviced may have more procedures for service and maintenance. Contact your Lippert service representative for additional information.

⚠WARNING

The "WARNING" symbol above is a sign that a service or maintenance procedure has a safety risk involved and may cause serious injury or death if not performed safely and within the parameters set forth in this manual.

Safety Information

Always wear eye protection when performing service or maintenance to the vehicle. Other safety equipment to consider would be hearing protection, gloves and possibly a full face shield, depending on the nature of the service.

Required Resources

- 2"x 4" wood block
- Cotter Pin
- Permatex Sealant
- Torque Wrench, 400 ft-lbs rated

Hub Removal

It is normal to have a small residual amount of grease on the exterior of a new hub. Most of the time, simply wiping off the residual grease is an appropriate solution. However, if there is noticeable diminished braking capability or grease continues to weep, the hub should be checked by a qualified service provider. It is not normal for a hub to continue to weep grease after its initial installation. Excess grease can coat the brake pads, magnets and braking surfaces inside of the hub.

⚠WARNING

Lift unit by the frame and never the axle or suspension. Do not go under unit unless it is properly supported by jack stands. Unsupported units can fall causing death or serious injury.

1. Lift and support unit per manufacturer's requirements.
2. Remove the lug nuts from the wheel and set aside (Fig. 1).
3. Remove the wheel from the axle hub and set aside (Fig. 2).

Fig. 1

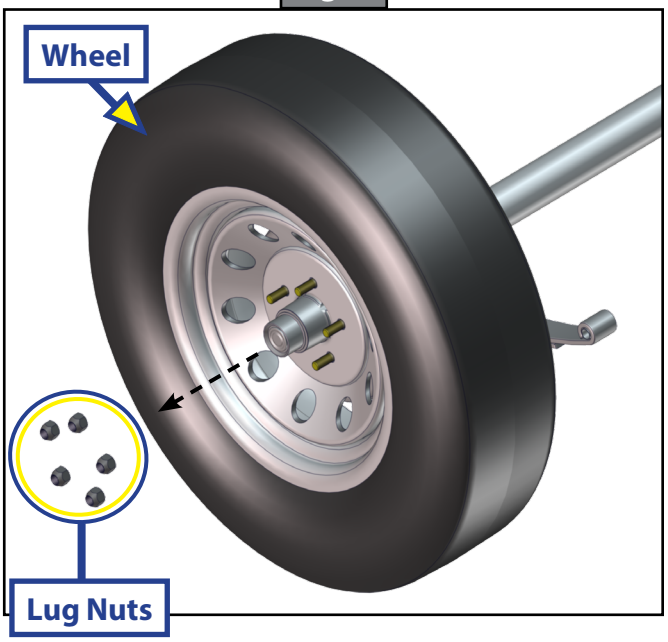

Fig. 2

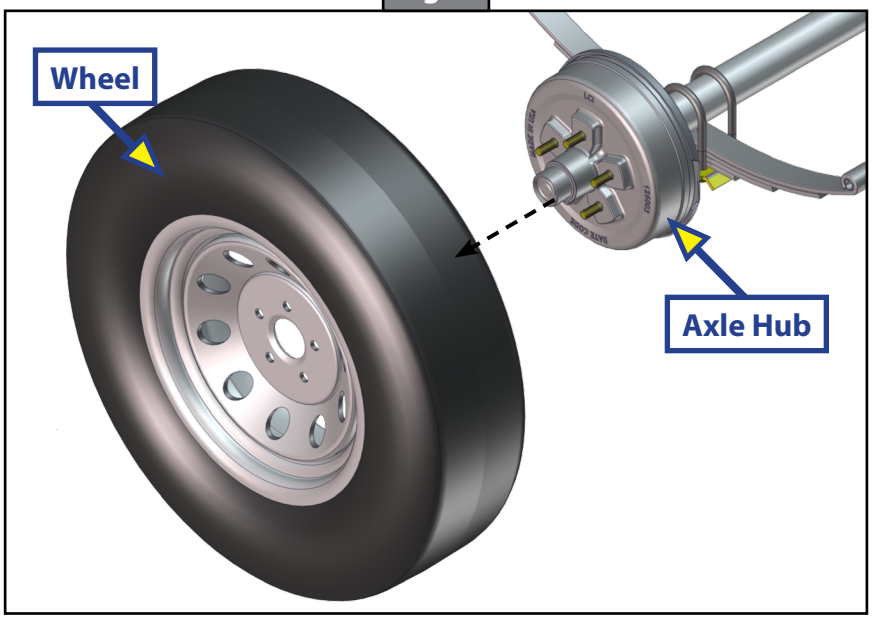

4. Remove the dust cap by prying the edge out of the hub (Fig. 3). If equipped with oil lubrication, unscrew oil cap using a 2 ½″ socket. Let oil drain into drip pan.
5. Pull the cotter pin from the castle nut and discard the cotter pin (Fig. 4).
   - **A.** Cotter pin is a one-time-use item. Do not reinstall removed cotter pin.

Fig. 3

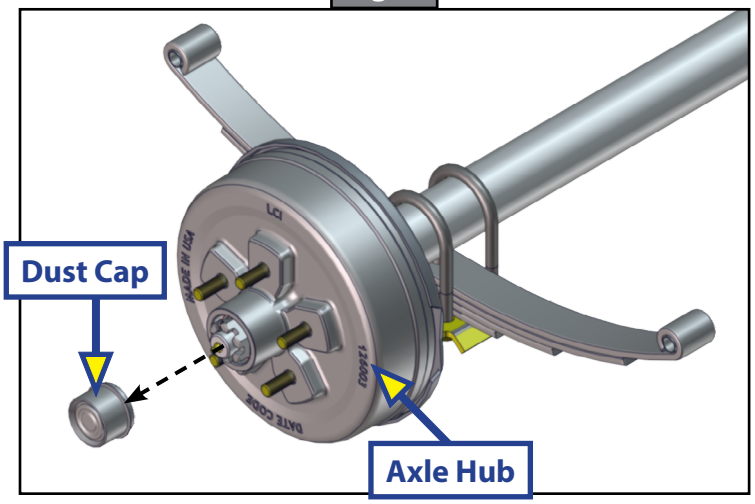

Fig. 4

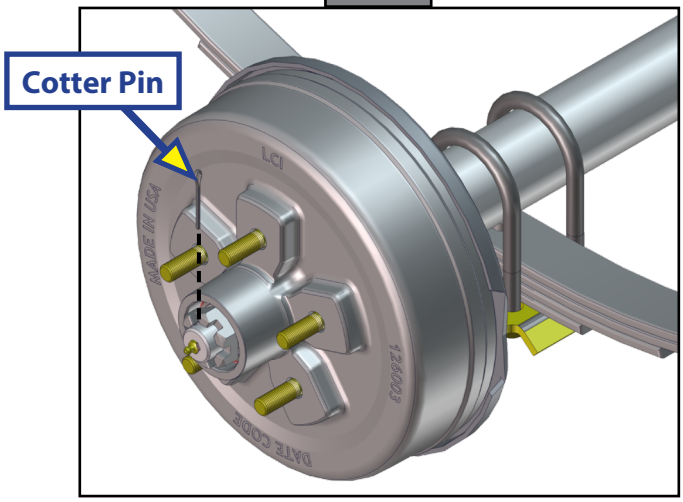

6. Remove the castle nut from the spindle (Fig. 5).
7. Remove the spindle washer from the spindle (Fig. 6).

NOTE: Make sure brakes have been disengaged.

8. Place hand over nose of hub during removal to contain outer bearing cone or remove outer bearing cone prior to removal of axle hub. Remove the axle hub from the spindle (Fig. 7).

NOTE: Brakes may need to be adjusted or backed off to remove drum from spindle.

NOTE: A gear puller may be necessary to remove axle hub from spindle.

⚠ CAUTION

Be aware that when hubs and braking components are opened, disassembled, or otherwise tampered with, there is a possibility of grease coating the brake pads, magnet and braking surfaces of the hub, greatly reducing the mechanism's ability to effectively bring the vehicle to a slower speed or stop. If grease is present on the brake pads, magnet or the braking surface of the hub, the hub and brake assembly MUST be replaced.

Fig. 5

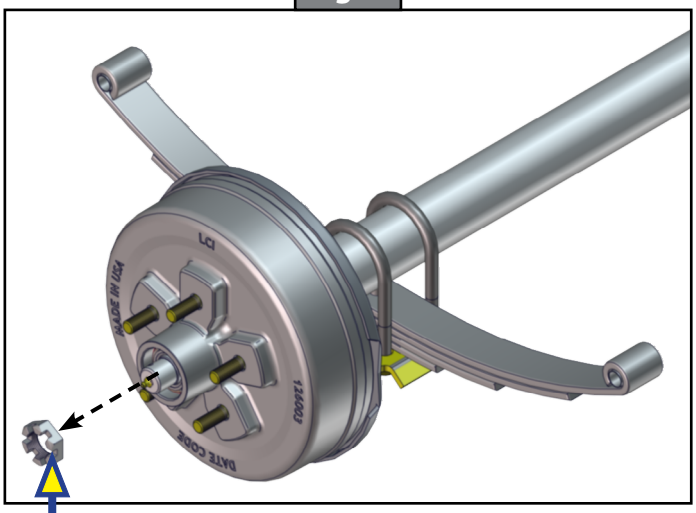

Fig. 6

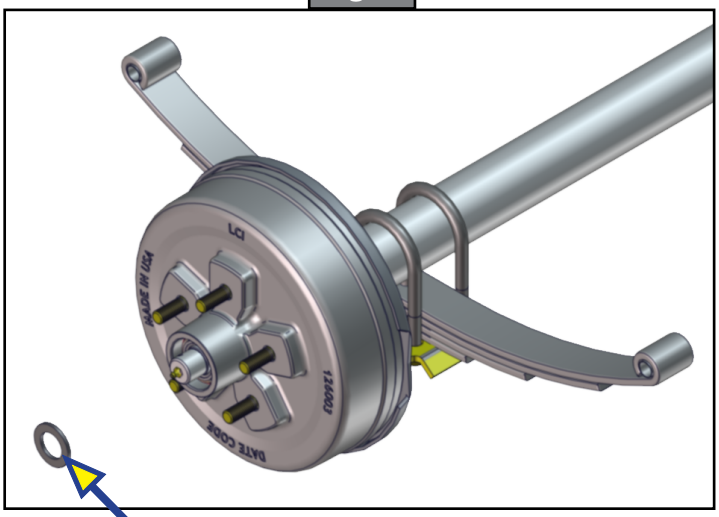

Fig. 7

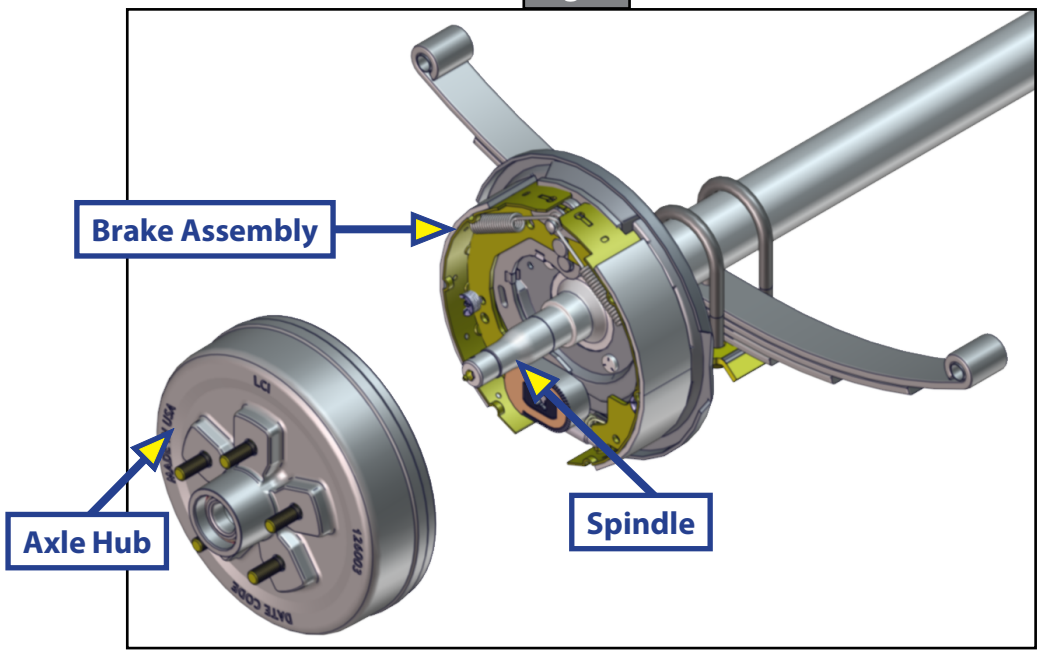

Axle Beam Replacement

1. Remove brake assembly backer plate from spindle by removing the nuts and washers from the backside of the axle hub backer plate (Fig. 8 and Fig. 9).

Fig. 8

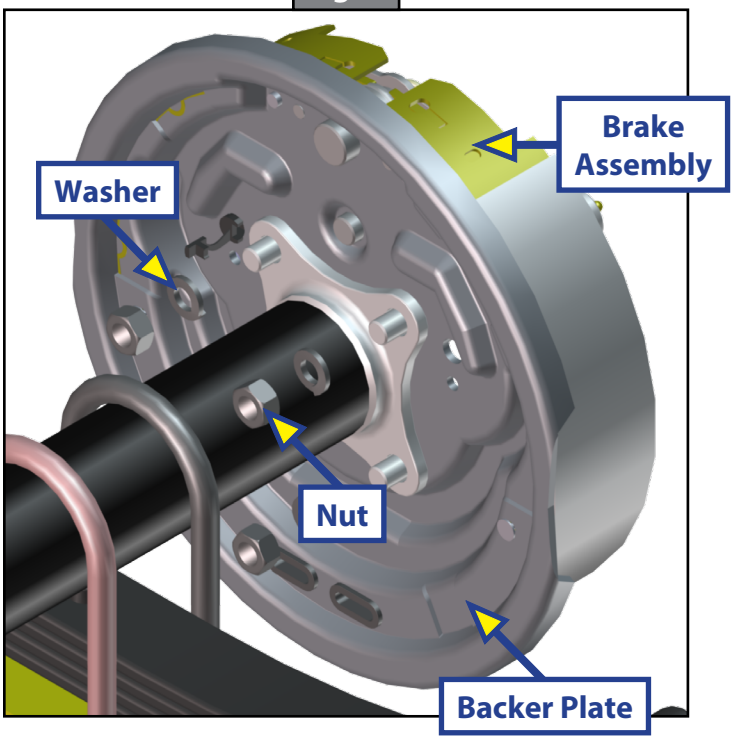

Fig. 9

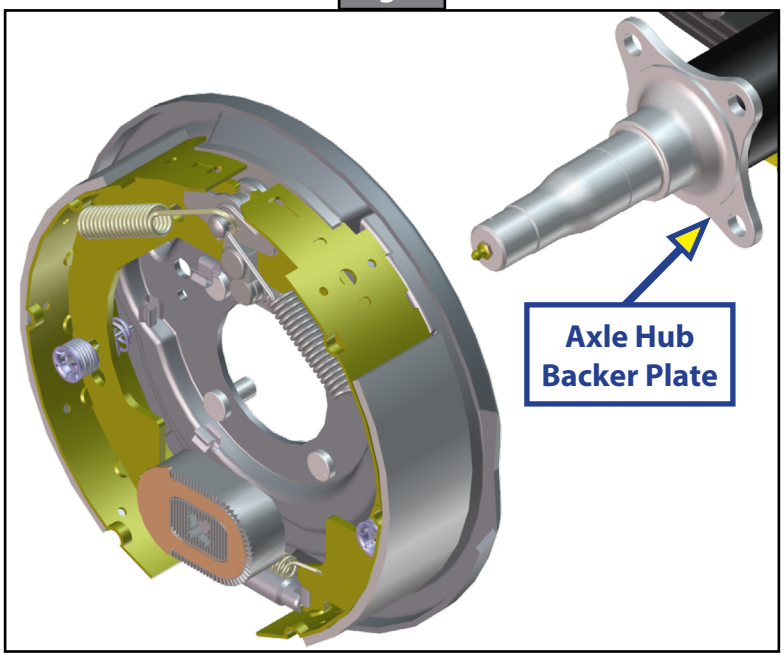

2. Support axle beam from underneath to prevent it from falling to the floor once the U-bolts are removed.
3. Remove nuts from U-bolts and remove U-bolts from axle beam (Fig. 10).
4. If a shock kit is installed on the axle, the shock will have to be removed from the tie plate before the U-bolts and nuts are removed (Fig. 11).
5. Remove old axle beam.

Fig. 10

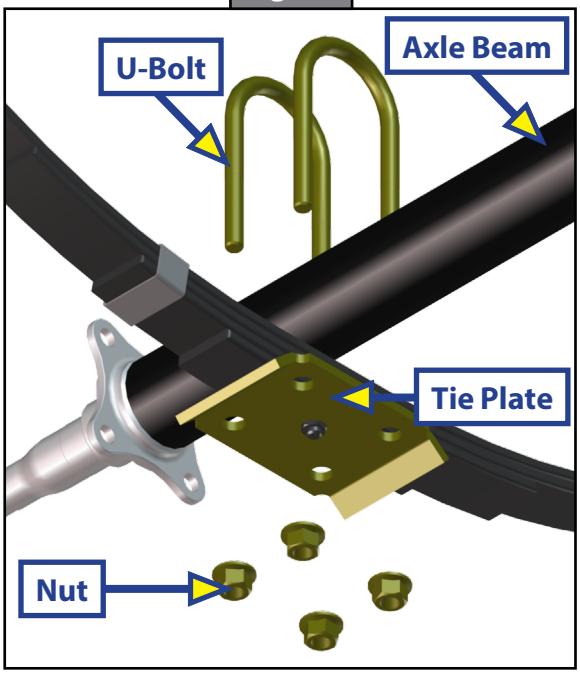

Fig. 11

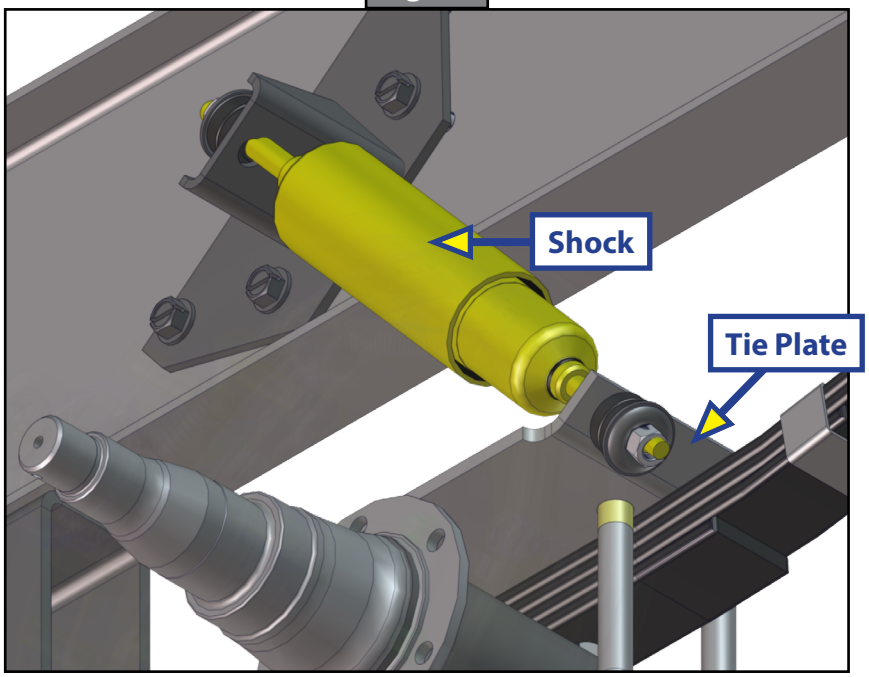

6. Install new axle beam.

NOTE: Be sure axle info tag and brake wires are facing towards the rear of the unit.

7. Install new U-bolts.
8. If necessary, install new tie plates.
9. If unit is equipped with a shock kit, the shock will have to be reinstalled through the tie plate after the new U-bolts and nuts have been installed (Fig. 11).

NOTE: Make sure leaf springs are centered on the new axle beam. Spring clips on leaf spring should be on the sections of the leaf spring facing the front of the coach, unless two spring clips are installed.

10. Torque U-bolt nuts to values listed in the U-Bolt Torque Guide chart.

U-Bolt Torque Guide	
2K Axle	35 ft-lbs
3.5K Axle with ½" U-Bolt	50 ft-lbs
5.2K Axle	65 ft-lbs
6K-8K Axle	90 ft-lbs
7K-8K Axles with overslung spring orientation equipped with silver zinc U-Bolts	145 ft-lbs
10K Axle	95 ft-lbs
12K-16K Axle	115 ft-lbs

11. Install onto spindle.
    - **A.** Reinstall backing plate washers and nuts (Fig. 8).
    - **B.** Torque the nuts to 35-55 ft-lbs for 2K-7K Axles.
    - **C.** Torque the nuts to 55-80 ft-lbs for 8K-16K Axles.

Seal Inspection and Replacement

Always check the seal to make sure that it is not damaged, nicked, cracked or torn and is in good working order. If there is any question of condition, replace the grease seal.

NOTE: Lippert recommends replacing the grease seal whenever bearing packing is required.

Procedure to replace seal:

1. Pull seal from the hub with a seal puller. Never push the seal out with the bearing. The bearing may get damaged.
2. Apply a PERMATEX sealant to the outside of the new seal.

NOTE: Do not use PERMATEX on rubber encased seals.

3. Tap the new seal into place using a clean, hardwood block (Fig. 12).

NOTE: When installing a new oil seal, be sure side marked "AIR SIDE" is away from bearing cone.

Fig. 12

Hub Installation

NOTE: Wipe all grease from spindle prior to axle hub installation to prevent brake contamination after hub is installed.

1. Place new hub assembly onto the axle spindle followed by the spindle washer and castle nut (Fig. 13).

- **A.** Castle nut should be torqued to 50 ft-lbs.
- **B.** Rotate the hub during the tightening process.

Fig. 13

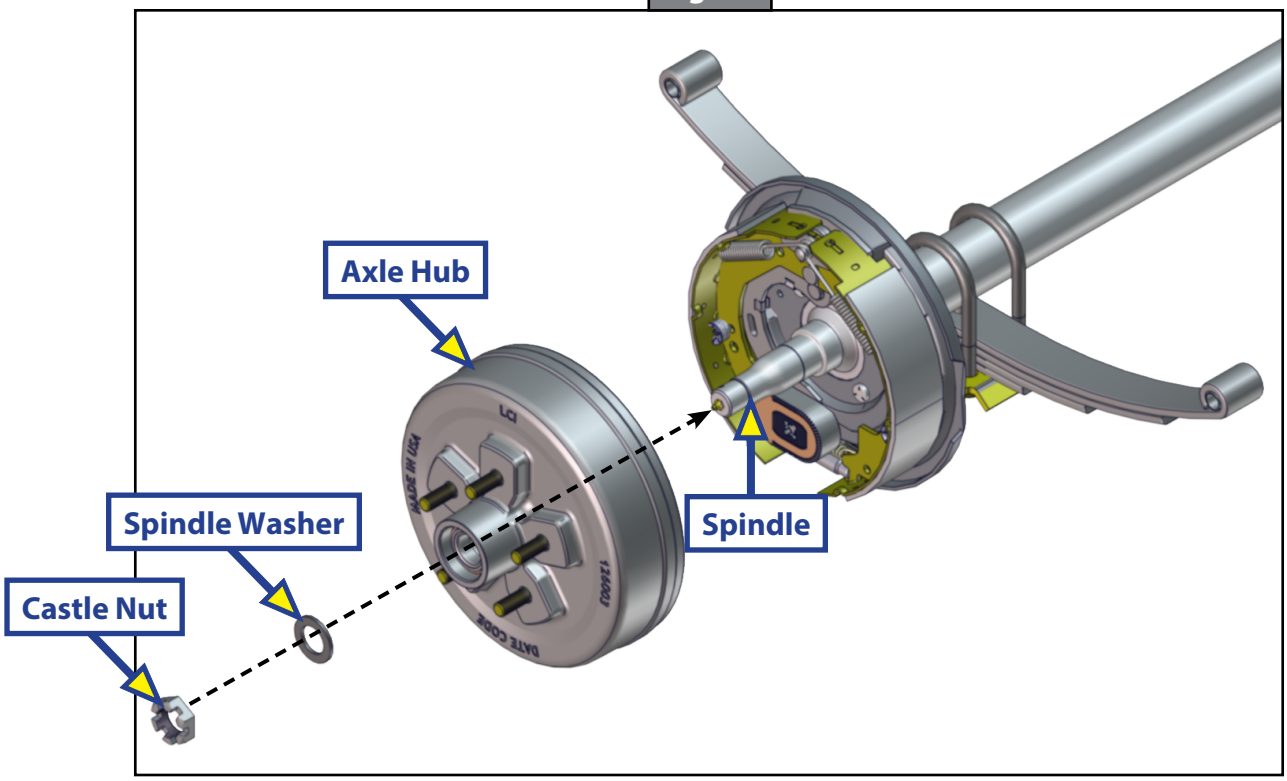

2. Loosen castle nut to back off the torque.

3. Tighten castle nut finger tight until snug.

4. Insert new cotter pin (Fig. 14). If cotter pin does not line up with hole, back castle nut off slightly until pin can be inserted.

Fig. 14

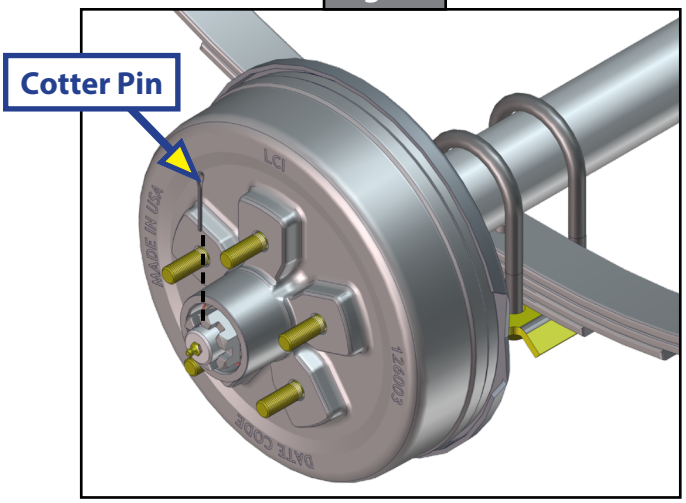

5. Bend cotter pin over to lock castle nut in place (Fig. 15). Nut should be free to move with only the cotter pin keeping it in place.

NOTE: Fig. 15 represents a 10K axle. Fig. 16 represents any axle 8K or smaller.

Fig. 15

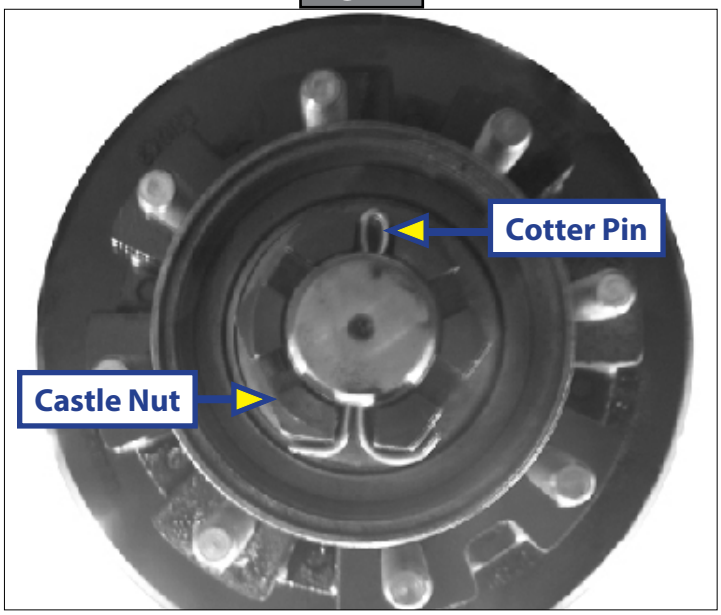

Fig. 16

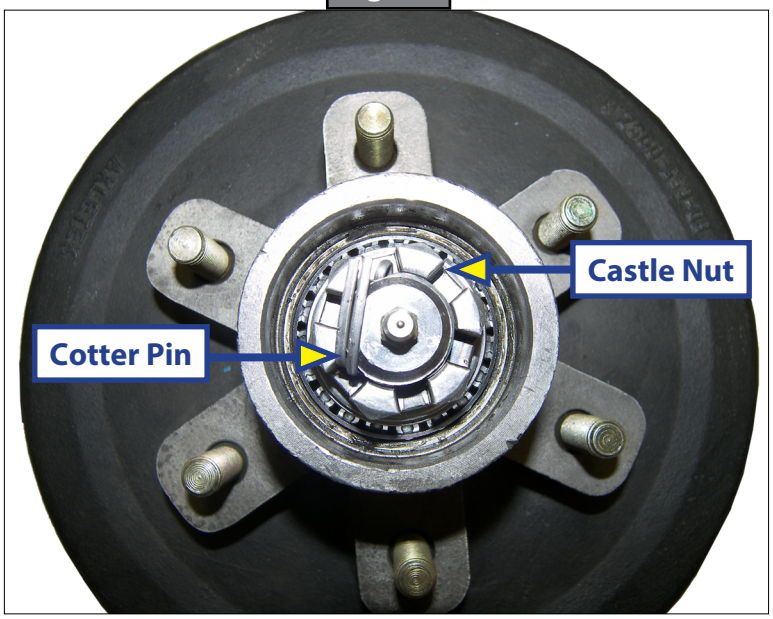

6. Reinstall dust cap into the axle hub assembly (Fig. 17).

NOTE: If your axles are equipped with oil lubricated hubs, periodically fill the hub with high quality gear oil. Tighten oil cap to 25 ft-lbs. Do not over-tighten oil cap or an oil leak may occur.

7. Reinstall the wheel onto the axle hub assembly (Fig. 18).

Fig. 17

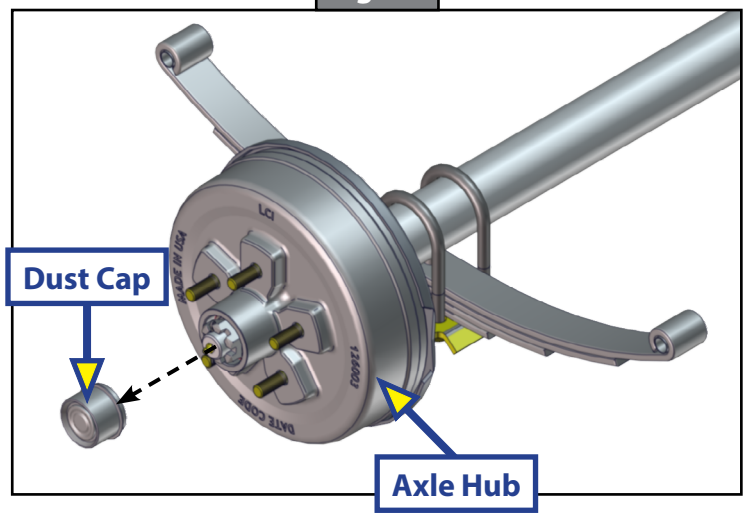

Fig. 18

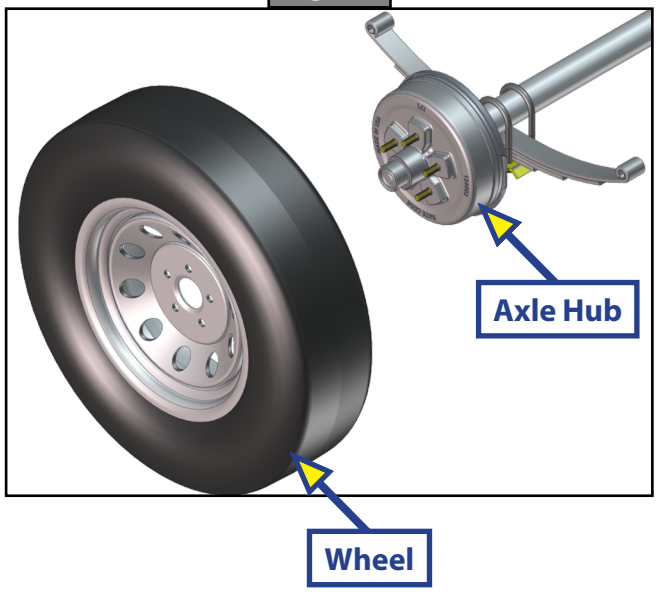

8. Reinstall the lug nuts onto the hub studs (Fig. 19). Torque lug nuts in accordance with specifications in Wheel Torque Requirement Chart.

Fig. 19

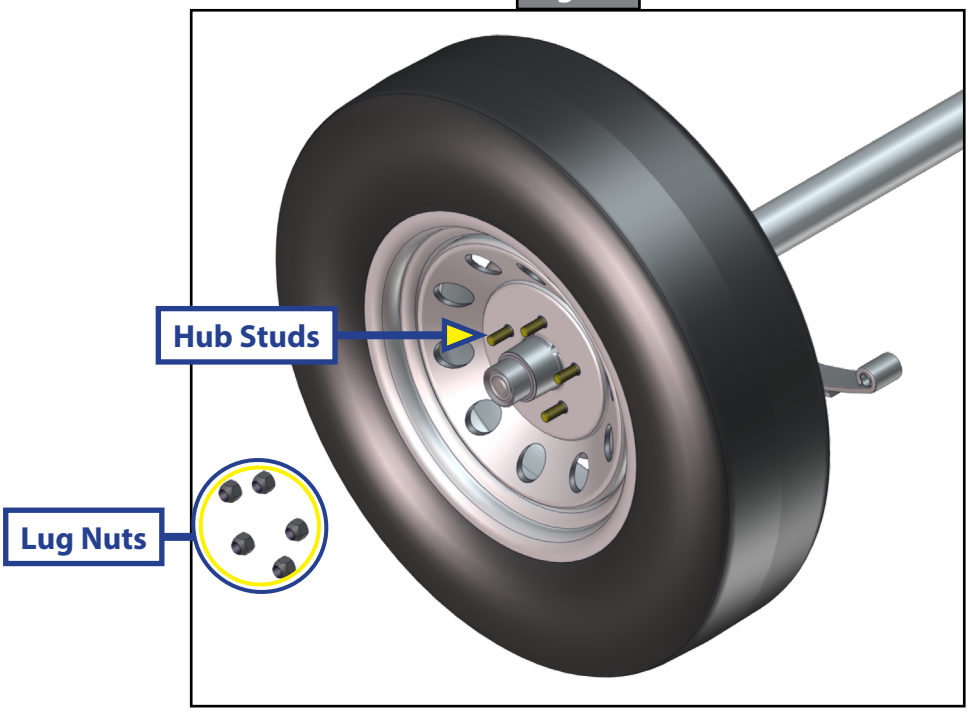

Wheel Torque Requirements

It is extremely important to apply and maintain proper wheel mounting torque limits on your trailer axle. Use of torque wrenches will ensure proper torque limits are applied to wheel mounting lug nuts. Use no other method to torque wheel lug nuts.

⚠WARNING

Proper and accurate torque MUST be maintained to prevent wheels from loosening, studs from cracking and/or breaking or other possible hazardous breakage that may result in death, serious personal injury, severe product or property damage.

Make sure wheel fasteners match the cone angle of the wheel (usually 60°or 90°) being serviced. Attach new wheel to the axle hub as follows:

1. Start all bolts or nuts by hand to prevent cross-threading.

2. Continue to hand-tighten wheel lug nuts in the sequential pattern shown in Figure 20.

3. After wheel lug nuts are fully hand-tightened, torque nuts in stages in the sequential pattern shown in Figure 20.

A. Torque wheel lug nuts to the torque values listed in the Wheel Torque Requirement Chart.

4. Wheel lug nuts should be torqued before first road use and after each wheel removal.

A. Check and re-torque wheel lug nuts after 10, 25 and 50 miles. A periodic check during regular service is recommended.

Wheel Torque Requirement Chart				
Wheel Size	Stud Size	Torque Sequence		
		1st Stage	2nd Stage	3rd Stage
14″	½″	20-25 ft-lbs	50-60 ft-lbs	90-120 ft-lbs
15″	½″	20-25 ft-lbs	50-60 ft-lbs	90-120 ft-lbs
16″	½″	20-25 ft-lbs	50-60 ft-lbs	90-120 ft-lbs
16.5″	½″	20-25 ft-lbs	50-60 ft-lbs	90-120 ft-lbs
14.5″ Demount	½″	Tighten sequentially to 85-95 ft-lbs		
16″	9⁄16″	20-25 ft-lbs	60-70 ft-lbs	120-140 ft-lbs
16.5″	9⁄16″	20-25 ft-lbs	60-70 ft-lbs	120-140 ft-lbs
16″ Dual and 17.5″ Cone Nut	⅝″	50-60 ft-lbs	100-120 ft-lbs	190-210 ft-lbs
16″ Dual and 17.5″ Flange Nut	⅝″	50-60 ft-lbs	150-200 ft-lbs	275-325 ft-lbs
17.5″ Dual Flange Nut	M22	50-100 ft-lbs	250-300 ft-lbs	450-500 ft-lbs

Fig. 20

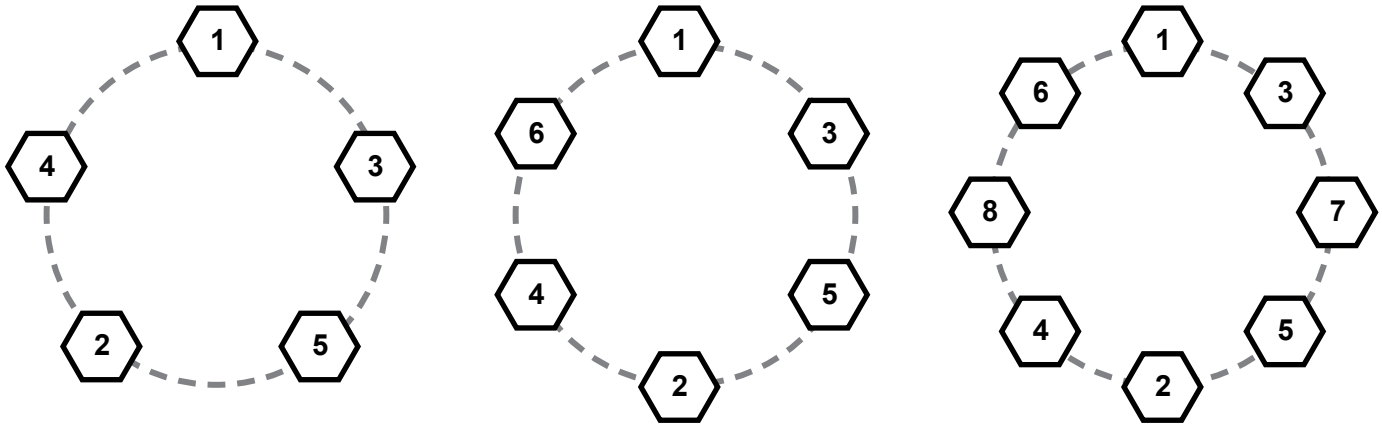

5 Lug **6 Lug** **8 Lug**

Notes

The contents of this manual are proprietary and copyright protected by Lippert. Lippert prohibits the copying or dissemination of portions of this manual unless prior written consent from an authorized Lippert representative has been provided. Any unauthorized use shall void any applicable warranty. The information contained in this manual is subject to change without notice and at the sole discretion of Lippert. Revised editions are available for free download from lippert.com.

Please recycle all obsolete materials.

For all concerns or questions, please contact Lippert
Ph: 432-LIPPERT (432-547-7378) | Web: lippert.com | Email: customerservice@lci1.com