

High-Resolution Water and Holding Tank Sensor

OEM Installation Manual

TABLE OF CONTENTS

Introduction **2**
Safety **3**
Resources Required **3**
Product Overview **4**
Glossary 4
Preperation **5**
Pre-installation Checklist **6**
Installation **7**
Sensor Configuration **10**
Sensor Operation **10**
Troubleshooting **11**

Introduction

This manual covers the installation and configuration of the Lippert High Resolution Water Level Sensor (the "Sensor"). The Sensor allows users to view water and holding tank levels at precise 1% increments and set custom alerts.

RV devices and capabilities may differ from the images in this manual. The Sensor may be paired with all existing Unity multi-function boards equipped with tank inputs with the appropriate software revision.

For additional support on this product, please visit:
https://support.lci1.com/high-resolution-water-holding-tank-sensor

NOTE: Images used in this document are for reference only when assembling, installing and/or operating this product.

Safety

Read and understand all instructions before installing or operating this product. Adhere to all safety labels.

This manual provides general instructions. Many variables can change the circumstances of the instructions, i.e., the degree of difficulty, operation and ability of the individual performing the instructions. This manual cannot begin to plot out instructions for every possibility, but provides the general instructions, as necessary, for effectively interfacing with the device, product or system. Failure to correctly follow the provided instructions may result in death, serious personal injury, severe product and/or property damage, including voiding of the Lippert limited warranty.

⚠WARNING

The "WARNING" symbol above is a sign that a procedure has a safety risk involved and may cause death or serious personal injury if not performed safely and within the parameters set forth in this manual.

⚠WARNING

Failure to follow instructions provided in this manual may result in death, serious personal injury and/or severe product and property damage, including voiding of the component warranty.

⚠CAUTION

The “CAUTION” symbol above is a sign that a safety risk is involved and may cause personal injury and/or product or property damage if not safely adhered to and within the parameters set forth in this manual.

⚠CAUTION

Always wear eye protection when performing service, maintenance or installation procedures. Other safety equipment to consider would be hearing protection, gloves and possibly a full face shield, depending on the nature of the task.

Resources Required

- Android or Apple Smart Phone is recommended.
- 80mm hole saw
- Cordless or electric drill
- Harness cable with power, CAN and ground lines
- Means to connect to RV wiring

Fig. 1



Fig. 2

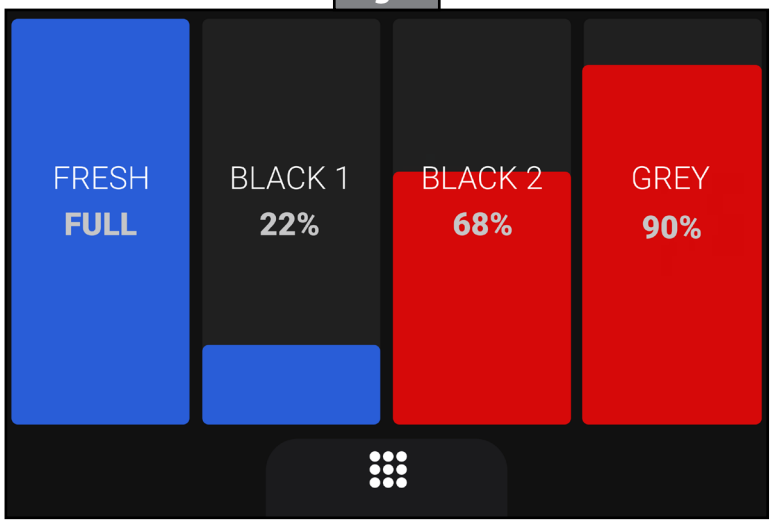

Product Overview

The Sensor (Fig. 1) provides accurate and hassle-free tank monitoring:

- Measures in precise 1% increments (Fig. 2).
- Provides 'gallons remaining' (Fig. 2)
- Provides custom alerts.

Compact Design
The Sensor requires 12mm (½") of clearance above the top of a tank.

Easy Installation
Cut a 80mm hole and install the silicone grommet into the hole then press the sensor into the silicone grommet.

Effective for Fresh and Holding Tanks
The Sensor is made with food-safe materials, making it safe for Fresh tanks. The sensing lenses are coated with a non-stick coating to shed debris in Black and Grey tanks.

Glossary

FP: Floor plan.
68B: Lippert Technologies Plant 68B.
Unity: Refers to a OneControl® multi-function board such as an X270 or X4.

Preperation

To add a Sensor to a tank, work with your OneControl Specialist to add the Sensor's location to the tank's template.

1. The sensor must be located at the deepest part of the tank (Fig. 3).
2. Add the location to the template (Fig. 4).
3. Remove the template from the tank and drill hole for the Sensor (Fig.5).

Fig. 3



Fig. 4



Fig. 5

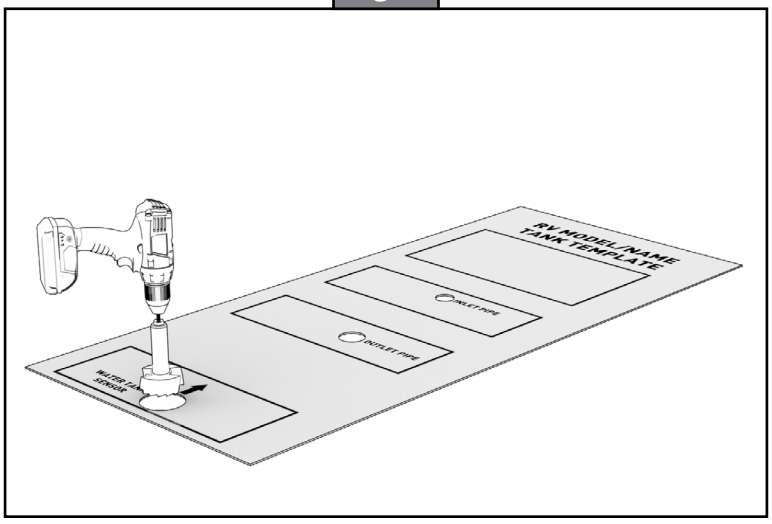

Pre-installation Checklist

Before installing, confirm the following:

- ☐ Ensure the sensor is configured with a representative from Lippert Electronics.
- ☐ Identify tanks receiving the Sensor.
- ☐ Update template with assistance from Lippert Electronics.
- ☐ Check that Sensor and harness do not interfere with RV structure, chassis, ducting, etc.
- ☐ Check that wiring harness is properly oriented.
- ☐ Identify adequate cable length.
- ☐ Make sure harness is accessible once the tank is installed.
- ☐ Locate appropriate harness extension.
- ☐ Locate appropriate connector.

Installation

1. Place template in position on tank (Fig. 6A).
2. Drill all holes from template into tank (Fig. 6B).

Fig. 6

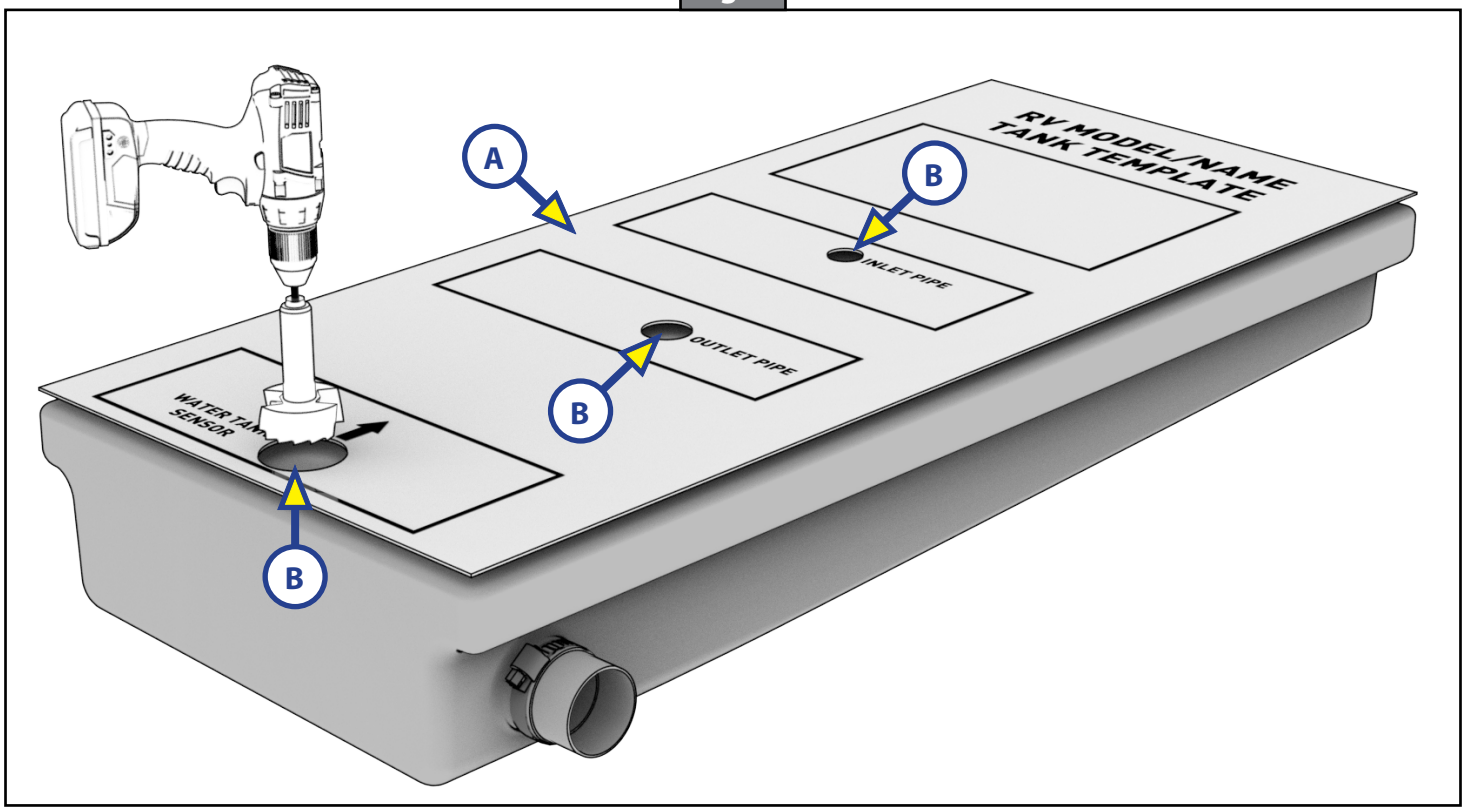

3. Remove kerf and debris from tank (Fig. 7).

Fig. 7

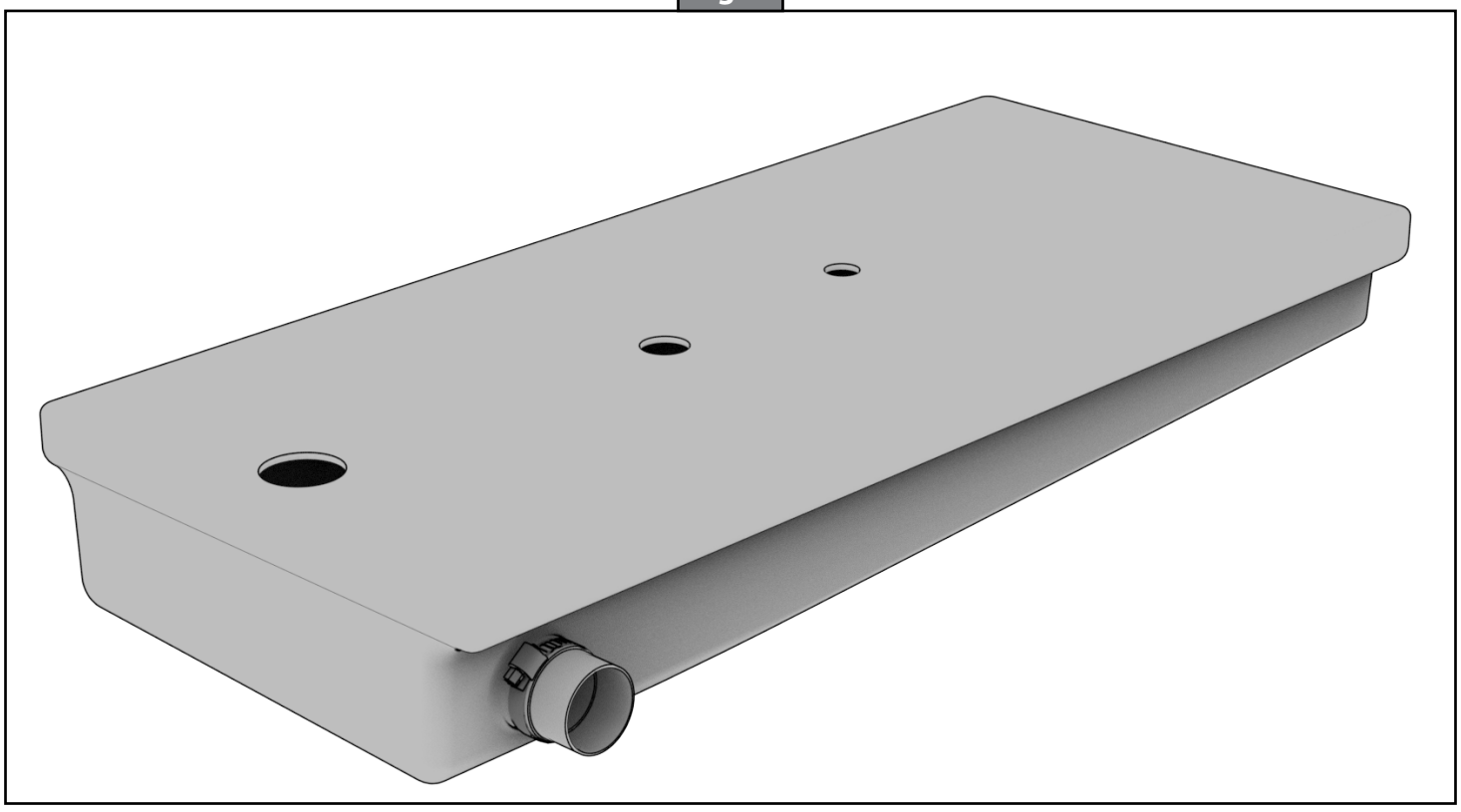

4. Clear the hole of debris and sharp edges, clear debris from around the hole.
5. Remove sensor from wrapping.
6. Install silicone grommet into the hole (Fig 8). Ensure silicone grommet is properly installed as shown.
7. Install grommet by pressing firmly into the tank (Fig. 8).
8. Orient sensor over the grommet. Ensure wiring is facing desired direction. Press sensor firmly into the silicone until installed correctly (Fig. 8).

Fig. 8

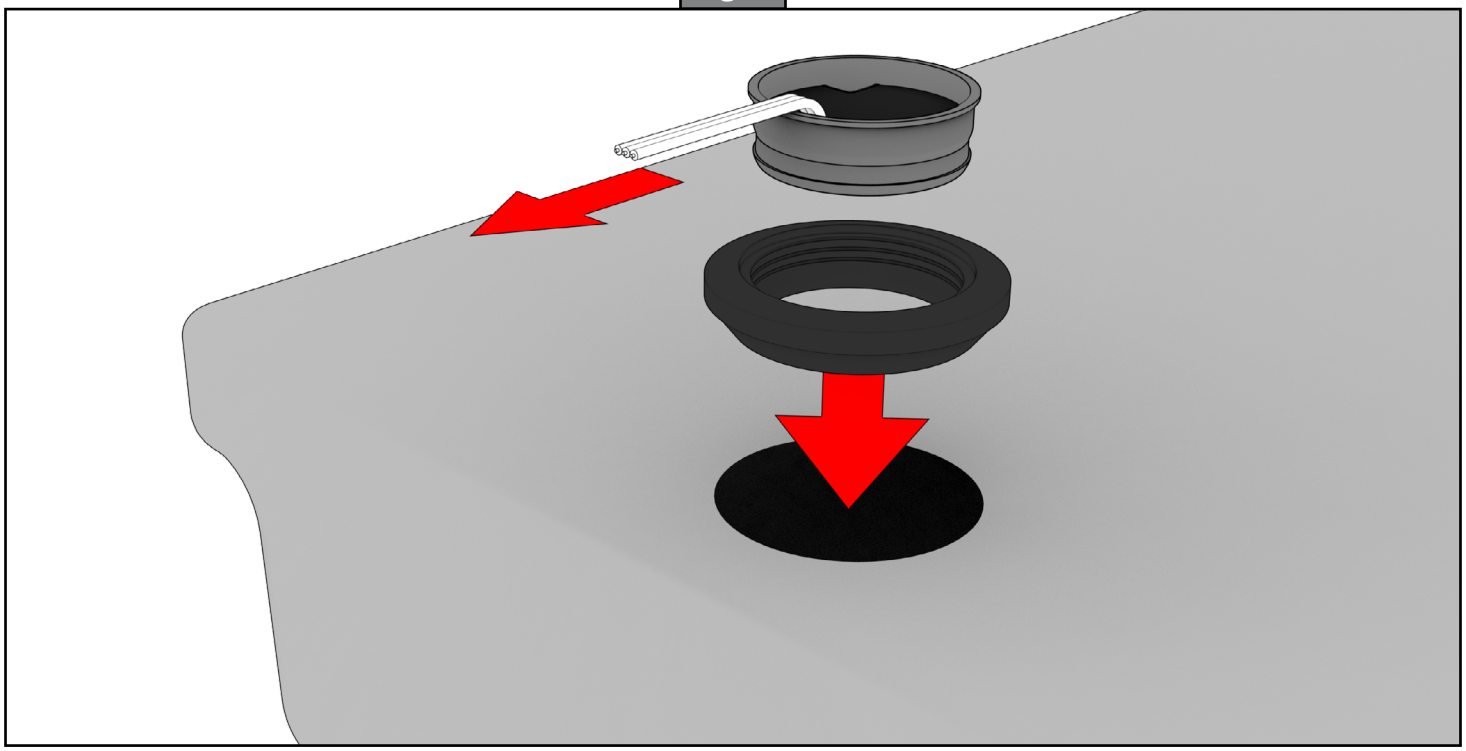

⚠ NOTICE

All electrical wiring harnesses shall be secured to prevent possible damage and installed in accordance with RVIA electrical standards.

9. Check harness length and orientation.

NOTE: Ensure harness is accessible once tank is installed on the RV (Fig. 9).

10. Connect Sensor to a wire harness that includes:
    A. Red - power
    B. White - ground
    C. Green - serial communication

Fig. 9

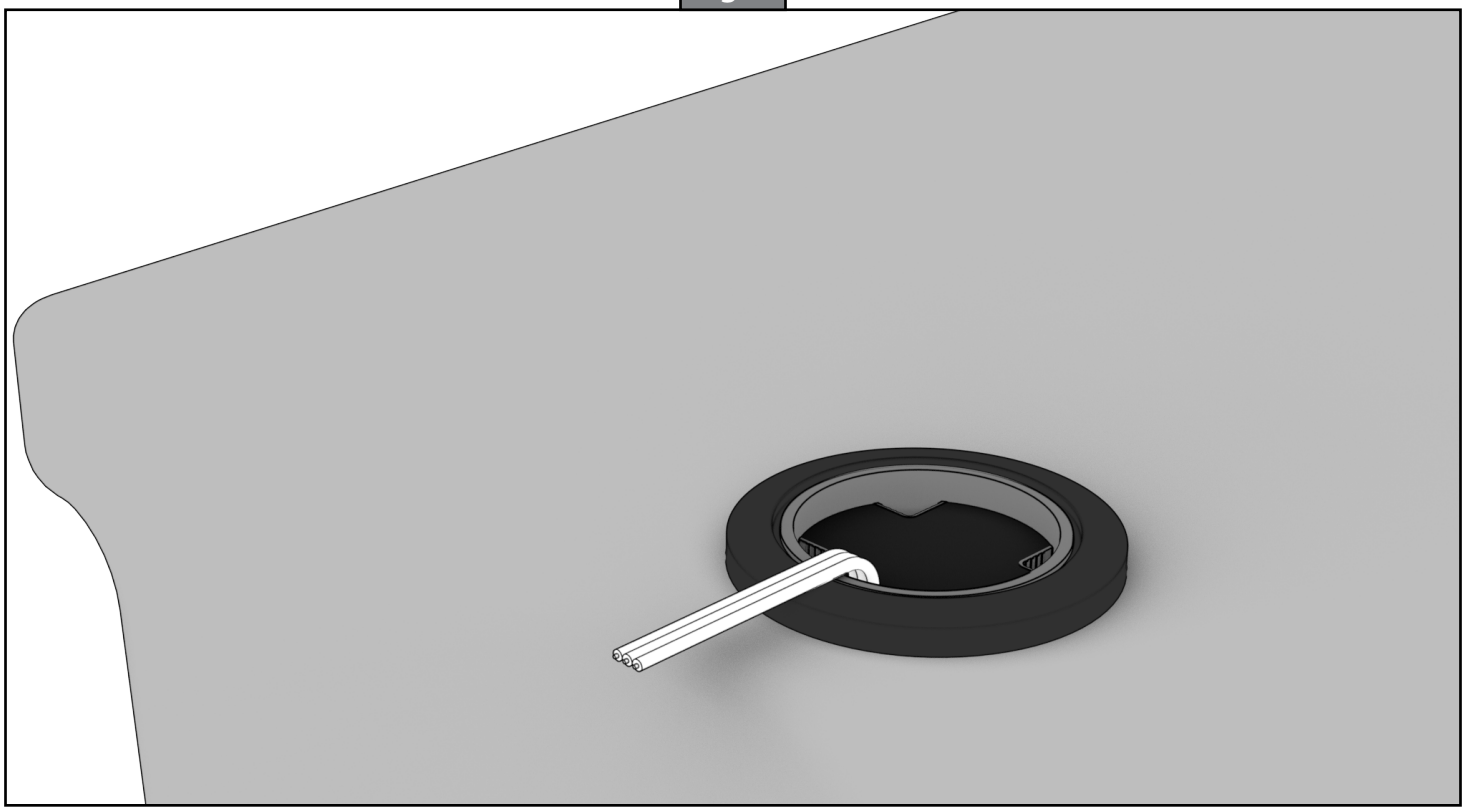

11. Put the tank in position on the part of the chassis selected (Fig. 10).

Fig. 10

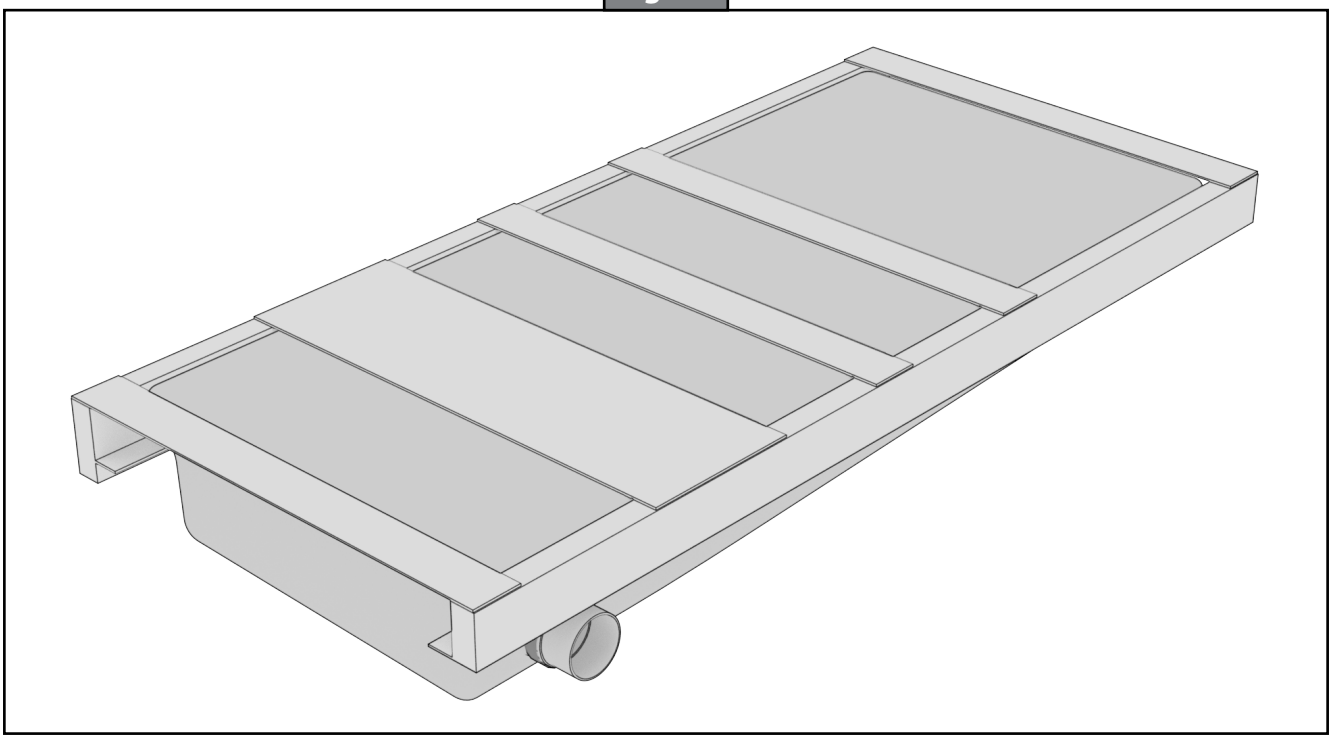

Sensor Configuration

Sensors are configured for each FP and tank by 68.

If the unit is equipped with a OneControl Monitor Panel, Premium Monitor Panel or Platinum Panel, the Sensor's configurations will automatically load.

If unit is equipped with an OCTP 3.5 (or higher) and a OneControl Monitor Panel, Premium Monitor Panel or Platinum Panel, the Sensor's configurations will automatically load.

If unit is equipped with an OCTP only, Sensor configurations will be loaded via USB.

Sensor Operation

To confirm proper operation, observe tank levels during water system fill test.

On OCTP 3.5, Camp Manager™ or Platinum Panel, tank widgets will increase or decrease in increments of 1%. More information can be found in the OEMs manuals for those products.

Figure 11: Platinum Panel.

Fig. 11

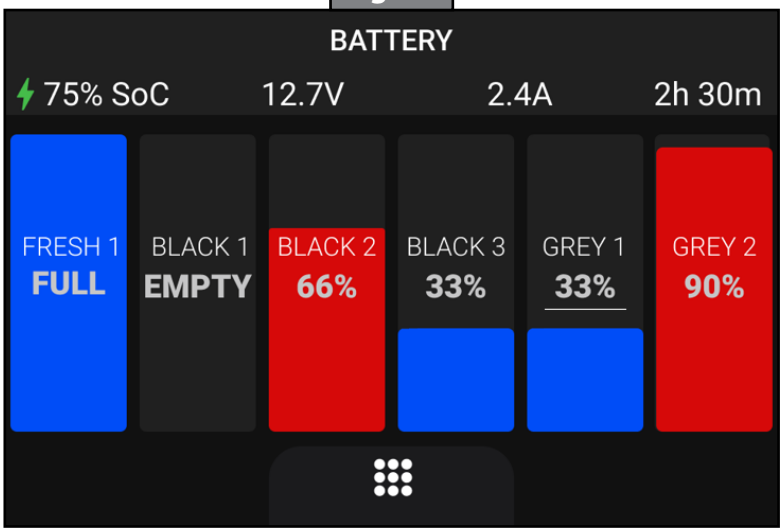

Figure 12: Camp Manager Touch Panel.

Fig. 12

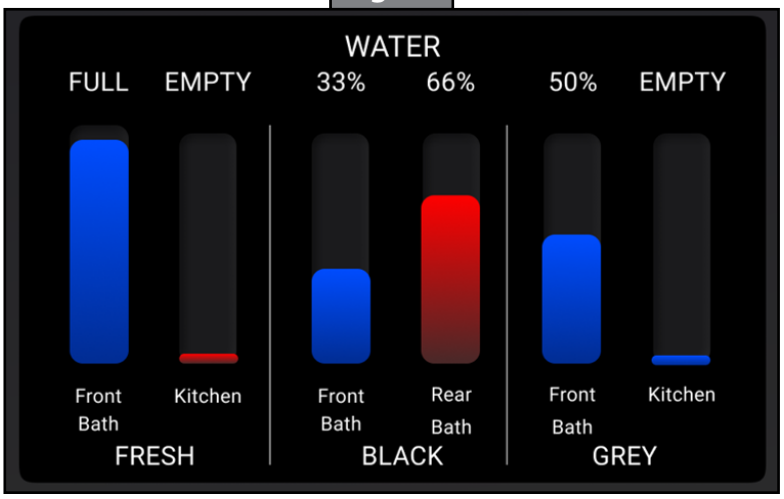

Troubleshooting

If Sensors do not show up on OCTP or Platinum Panel:

- Confirm the Unity board is POWERED.
- Confirm CAN connection to Unity.
- Confirm CAN connection to OCTP/SPMP.
- Confirm CAN network is properly terminated.
- If the FP has an OCTP and a Monitor Panel, the sensor will be auto-configured by Monitor Panel. If Sensors do not show up on OCTP, make sure Monitor Panel is powered and connected to CAN.

If Sensors show up but do not display a reading:

- Wait at least 1 minute for readings to stabilize.
- Confirm Sensor POWER and GROUND are connected.
- Confirm SERIAL wire is connected to the correct TANK input on the Unity board.
- Confirm sensor is properly installed on the physical tank.

If Sensors show up and show a tank reading but the reading does not change:

- Wait at least 1 minute for readings to stabilize.
- Confirm Sensor POWER and GROUND are connected.
- Confirm SERIAL wire is connected to the correct TANK input on the Unity board.
- Confirm Sensor is properly installed on the physical tank.
- Confirm the actual water level is changing and nothing is obstructing the lenses of the Sensor.
- Cycle POWER to the tank sensor.

If Sensors arrived damaged, missing adhesive ring, missing screws or exhibit other defects that render them unusable:

- Contact Lippert Electronics representative.

The contents of this manual are proprietary and copyright protected by Lippert. Lippert prohibits the copying or dissemination of portions of this manual unless prior written consent from an authorized Lippert representative has been provided. Any unauthorized use shall void any applicable warranty. The information contained in this manual is subject to change without notice and at the sole discretion of Lippert. Revised editions are available for free download from lippert.com.

Please recycle all obsolete materials.

For all concerns or questions, please contact Lippert
Ph: 432-LIPPERT (432-547-7378) | Web: lippert.com | Email: customerservice@lci1.com