LEVEL BEST 2000

INSTALLATION GUIDE

Kwikee

DISCONTINUED

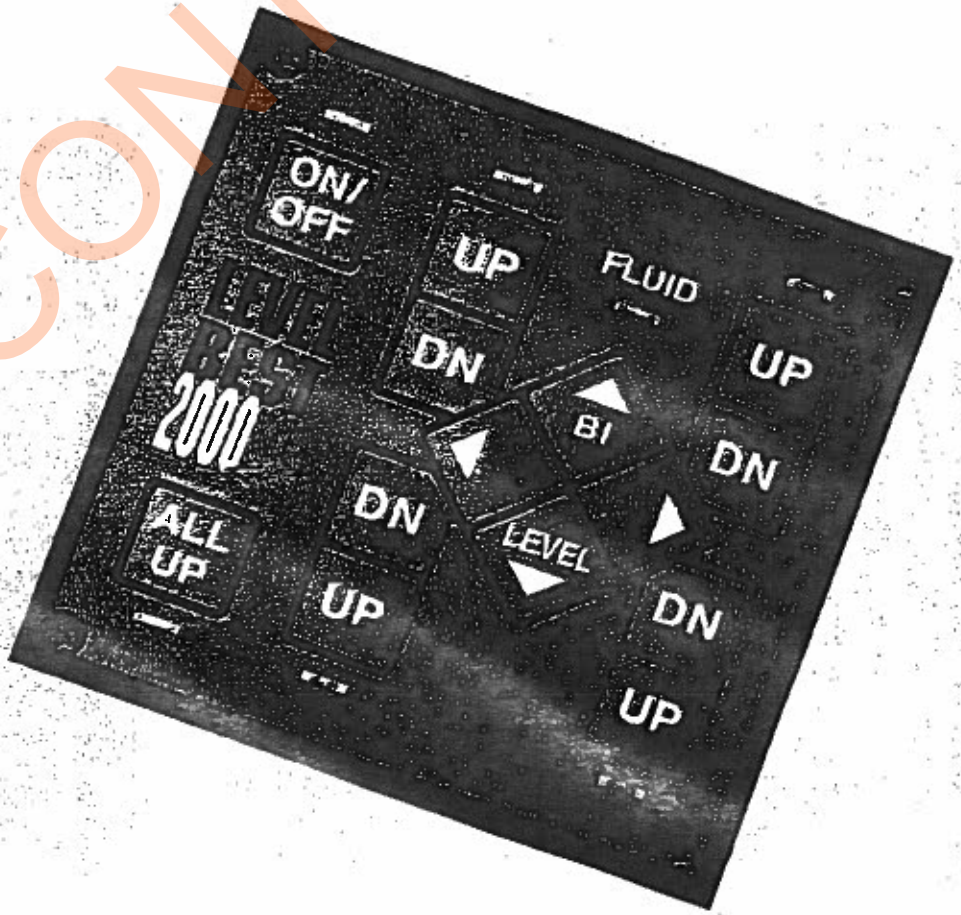

Kwikee Products Company, Inc,
230 Davidson Avenue
Cottage Grove, Oregon 97424-9545
(541) 942-3888

© 10/97 Kwikee Products Co., Inc.
Kwikee #9699900 REV. B

LIMITED WARRANTY

Kwikee Products Company, Inc. ("Kwikee") warrants to the original purchaser that the Level Best 2000® hydraulic leveling/stabilizing system is free from defects in material and workmanship for a period of five years from the date of purchase. Kwikee's obligation under this warranty is limited to the repair or replacement of defective parts returned to Kwikee's' factory.

Kwikee will pay for or furnish both parts and labor required to repair or replace its products on claims submitted within two years of the date of purchase. Kwikee will pay for or furnish only replacement parts on claims that are submitted after two years and less than five years from the date of purchase. The warranty on repaired or replaced parts shall be limited to the unexpired duration of the original warranty.

This warranty does not apply to products or parts that, in Kwikee's opinion, have been subject to abuse, accident, alteration, improper installation/repair, inadequate maintenance or deterioration due to normal wear. This warranty does not apply to electrical wiring or hydraulic hoses. The purchaser shall pay all shipping or other transportation charges for any warranty claim.

Kwikee makes no warranty (and disclaims any implied warranty) regarding the merchantability, fitness for a particular purpose or the suitability of this product for use with other products. In no event shall Kwikee be liable for incidental, consequential or property damage arising from the purchase and/or use of this product or any claim hereunder. This warranty is in lieu of all other express and implied warranties. Kwikee neither assumes nor authorizes any other person to assume any liability for warranty claims not provided herein.

This warranty gives you specific legal rights including other rights that may vary from state to state. Some states do not allow limitations on implied warranties and exclusion or limitation of incidental or consequential damages, therefore the limitations and exclusions contained herein may not apply to you.

Any questions regarding warranty claims should be directed to your dealer or contact Kwikee Products Company. Address correspondence to: Kwikee Customer Service Representative, 230 Davidson Ave., Cottage Grove, Oregon 97424; or contact us by telephone at 1- (800) 736-9961.

DISCONTINUED

NOTE: Any parts returned for warranty service/repair with wires cut will result in voiding of the warranty.

NOTE: It is important to read and understand this manual thoroughly before initiating any installation of the jacks. Kwikee Products Company, Inc, assumes no liability for damages or injury resulting from the improper installation or operation of the Level Best 2000® Hydraulic Leveling/Stabilizing System.

INTRODUCTION

INTRODUCTION

The Level Best 2000® leveling and stabilizing system is an electronically controlled/hydraulically operated unit that consists of a 12 volt DC powered motor/pump/manifold assembly with fluid reservoir, hydraulic hoses, four hydraulically operated jacks, a motor control unit and switch panel, and an optional level sensor. It is designed to meet the varying requirements of vehicles ranging from class "C" motorhomes to the large class "A" motorhome.

As with the installation of any electrically controlled/hydraulically operated system, prior experience is helpful. But for those who haven't acquired such experience, the pages of this manual have been prepared to help guide you through the installation of this system. Since the configuration of chassis and vehicular components can vary greatly from one manufacturer to another, the installation procedures outlined within this manual represent a generalized approach; the actual installation application may vary slightly. Always use safety equipment and safety goggles.

If, after thoroughly reading this manual, you still have questions in regard to the installation of the Level Best 2000® system, please contact the Kwikee Service Department at 1- (800) 736-9961. Getting your questions answered in advance will help to ensure a smooth installation and proper operation of the system.

DISCONTINUED

TABLE OF CONTENTS

ENTRY	PAGE
Warranty	2
Introduction	3
Table of Contents	3
Pre-Installation Planning	4
Installation	6
Control Panel Installation	6
Mounting the Motor/Pump/Manifold Assembly	8
Mounting the Cylinder Assembly	10
Attaching the Hydraulic Lines	12
Completing the Wire Connections	14
Bleeding the Hydraulic Lines	16
Final Installation & Adjustment	17
Appendix A Replacement Parts List	19
Appendix B Bracket Template & Insert Information	20

PRE-INSTALLATION PLANNING

Prior to beginning the actual installation procedure, examine the vehicle configuration and visualize the mounting position for each of the system's main components: the motor/pump/manifold assembly, the four hydraulic cylinders (2 left hand/drivers side, 2 right hand/passengers side) and the control panel. While you form this mental image/layout, keep the lengths of hoses and wiring, as well as the physical dimensions of each piece in mind and plan accordingly. Situate the component pieces within range of the hose lengths. Allow adequate clearance around each component for connecting wiring and hoses; and, provide for ease of access for performing routine maintenance. Refer to the following Figure 1 as a general physical reference.

NOTE: If the configuration of your vehicle does not readily lend itself to the suggested system configuration and alternatives do not appear feasible, feel free to contact Kwikee for some additional suggestions.

The first consideration is access to 12 volt DC power. Considering the configuration of the majority of today's recreational vehicles, an ideal location for mounting the motor/pump/manifold assembly would be immediately forward and below the engine's radiator (be sure not to restrict ventilation to the radiators cooling surface). This position should also provide easy access to the vehicle battery and offer a relatively accessible area for attaching the hydraulic hoses, making wiring connections and performing the suggested routine maintenance.

The next consideration is where to mount the hydraulic cylinders (the jacks). In examining the undercarriage of the vehicle, you will notice the construction of the chassis superstructure includes two parallel frame rails extending almost the entire length of the vehicle. The ideal location for the rear levelers is along the exterior side of

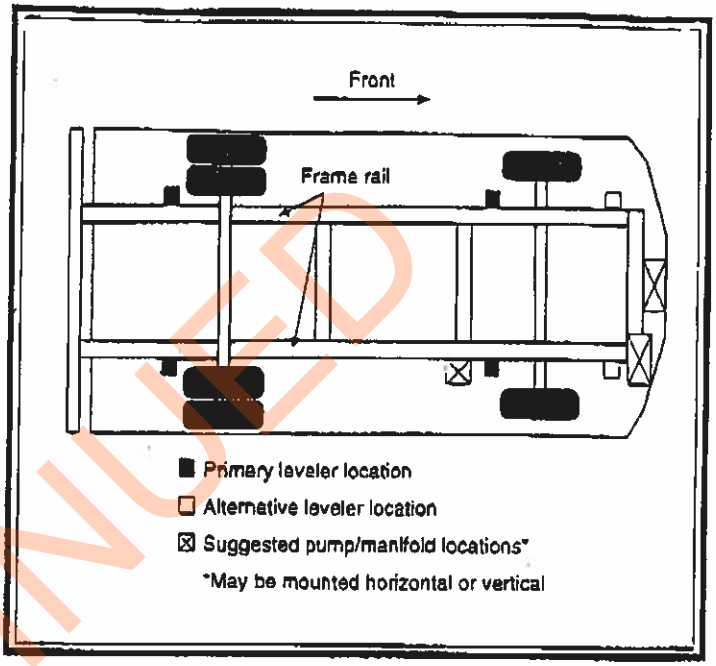

Figure 1

the frame rail and behind the rear axle, staying as close to the rear axle as possible. The ideal location for the front levelers is along the exterior side of the frame rail and behind the front axle.

NOTE: In positioning the levelers, be sure that when they swing up, the pivot direction is toward the rear of the vehicle and there is adequate space for the legs and foot pad in the stowed position. (See Figure 9 on page 10).

NOTE: On gasoline powered chassis do not mount the rear jacks more than 12" behind the rear spring hanger.

Next, select a location for the control panel. In most applications, the control panel is situated either below or, if adequate space is available, in the driver's instrument panel (dash board) or side panel. Any of these positions provide both ease of access for operating the system and close proximity to the motor/pump/manifold for wiring.

DISCONTINUED

NOTE: Prior to initiating any installation/ mounting procedure, read and understand the following important precautions:

- Read the entire installation procedure before beginning.
- Do not turn on power until the installation is complete. To avoid inadvertently turning the power on, do not connect the power source (battery) until the installation of all components is complete.
- In many of the procedures that follow, the initial fastening and securing of components is to temporarily secure the pieces. Later in the installation process, the components will be securely fastened.
- When routing and securing the hydraulic hoses, be sure they are not exposed to engine exhaust or any other high temperature component of the vehicle. It is recommended that any hose or wiring be situated a minimum of 12 inches away from any heat source. If 12" of separation is not possible, it will be necessary to fabricate a heat shield/baffle to protect the hose. The heat shield should be composed of an appropriate, nonflammable, heat resistant material.
- Do not mount the jack assemblies on "Mor-Ride" suspension system components except when suspension is supplied with jack mounting plates.
- During retraction, the pivot cam makes contact with the lifter plate and causes the leg/foot pad assembly to pivot upward; keep this area designated for stowing the jack leg clear off all obstructions.
- Use only the hoses and fittings supplied by Kwikee as part of the installation kit - use of any other hoses and/or fittings will void the warranty.

DISCONTINUED

CONTROL PANEL INSTALLATION

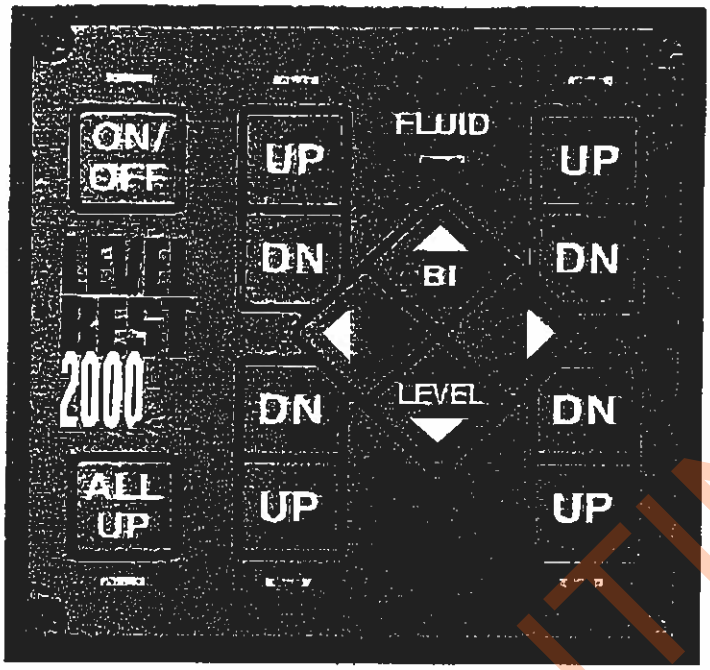

Figure 2

NOTE: Though the configuration of the control panel included in your system may not be identical to the one shown here, the operation is the same.

There are a number of methods for installing the control panel. One method uses the mounting bracket to install the control panel below the driver's instrument panel. (See Figures 4 and 5). Another method flush mounts the control panel into the vehicle instrument panel, provided space is available.

With any application, the first consideration is where the wires are to be routed. Examine the area around, behind and along the floor and walls for any preexisting holes that can be used to route the control panel wire from the pump/manifold assembly. If no hole can be found, drill a 1/2" hole through the fire wall near the selected installation site to the exterior. Route the wire through this hole to the area where the control panel will be mounted. When installing the optional level sensor, insert short cable from Control Panel to cable "T" connector. The medium length cable connects the level sensor to cable "T" connector as shown in Figure 3.

DISCONTINUED

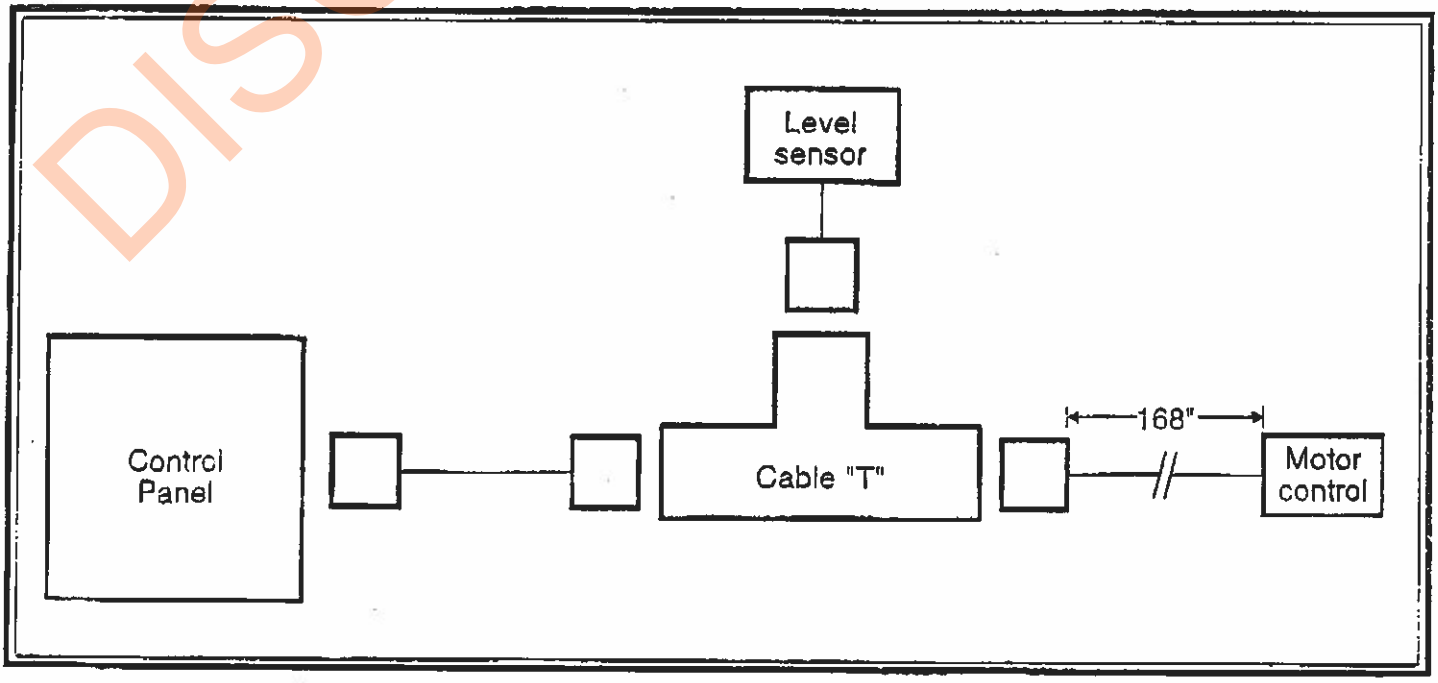

Figure 3, optional level sensor wiring

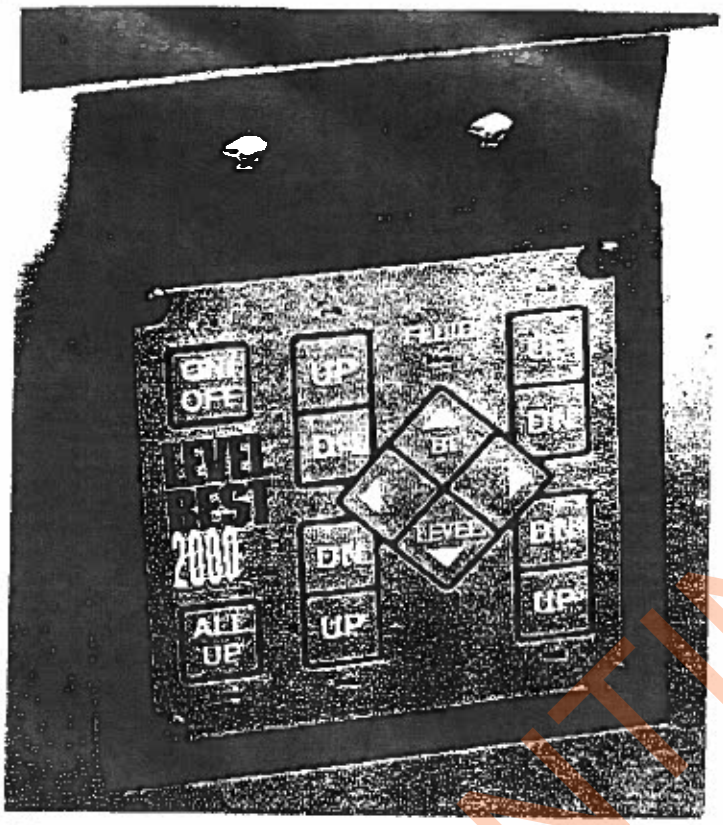

Figure 4, bracket reversed for wall mount

BRACKET MOUNT APPLICATION

For (with the bracket) mounting the control panel (See Figure 4), select a position along the lower edge of the dash that provides adequate surface area for mounting the bracket and allows for convenient system operation. Route the telephone wire through the opening in the bracket and insert the connector into the receptacle on the back of the control panel shown in Figure 5. Insert the control panel into the bracket and secure it in place with four of the 1/2" sheet metal screws (included in the panel mounting kit).

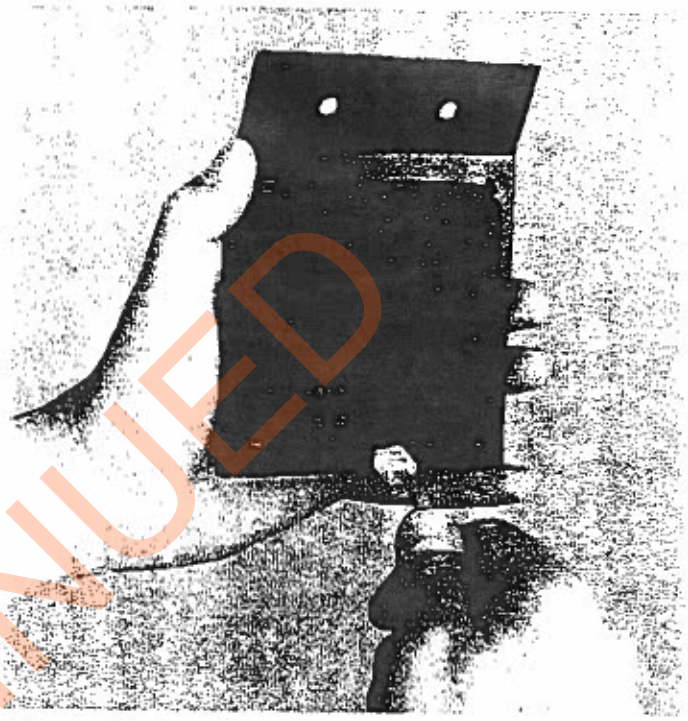

Figure 5, bracket positioned for dash mount

FLUSH PANEL MOUNT APPLICATION (Not shown)

Inspect the area chosen as the site for flush mounting the control panel and insure that there is adequate space for both the box portion of the control panel and the wire connection therein. Using the template supplied in Appendix B, carefully layout and cut the opening. Route the telephone wire through the opening in the dash and insert the connector in the receptacle on the back of the control panel. The control panel should fit snugly into this opening - it's easier to cut the opening too small and enlarge it to fit rather than to cut it too large and have to fill the opening back in.

NOTE: When the control panel has been installed and the wires have been routed, seal any holes you may have drilled from the interior to the exterior of the vehicle with a silicone sealant.

DISCONTINUED

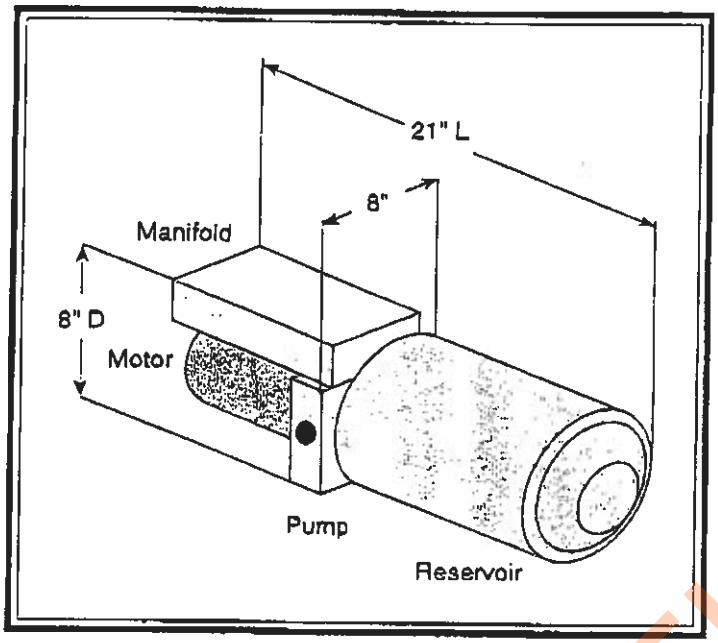

Figure 6

MOUNTING THE MOTOR PUMP/MANIFOLD ASSEMBLY

This assembly requires an area 21" long x 8" x 8" deep for installation. (See Figure 6).

NOTE: Hydraulic lines will be routed to the top of the manifold, be sure there is adequate working space above the manifold for making the hydraulic hose connections.

NOTE: To prevent debris from entering the hydraulic system and corrupting valve seals, the hose ends have been sealed with removable soft plastic plugs, Do not remove these plugs until you are ready to attach the hydraulic lines.

The bottom of the pump has been tapped for mounting with two 3/8"-16 x 1 bolts. The assembly can be mounted horizontally or vertically. For convenience, attach the ground wire to the motor prior to mounting the assembly and after mounting, fasten the ring terminal of the grounding cable to the battery or chassis ground.

NOTE: The reservoir fill breather cap must be installed vertically as shown in Figure 7.

It is also a good idea to install the 45° hydraulic fittings into the manifold prior to mounting. Determine which direction the hoses will be routed and point the fittings in the appropriate directions.

In some applications the pump assembly can be mounted to an existing chassis crossmember in front of and/or below or beside the radiator. The location of the pump assembly should not block or restrict the flow of air to the radiator. In some cases the available mounting surface may not be adequate and it may be necessary to fabricate a

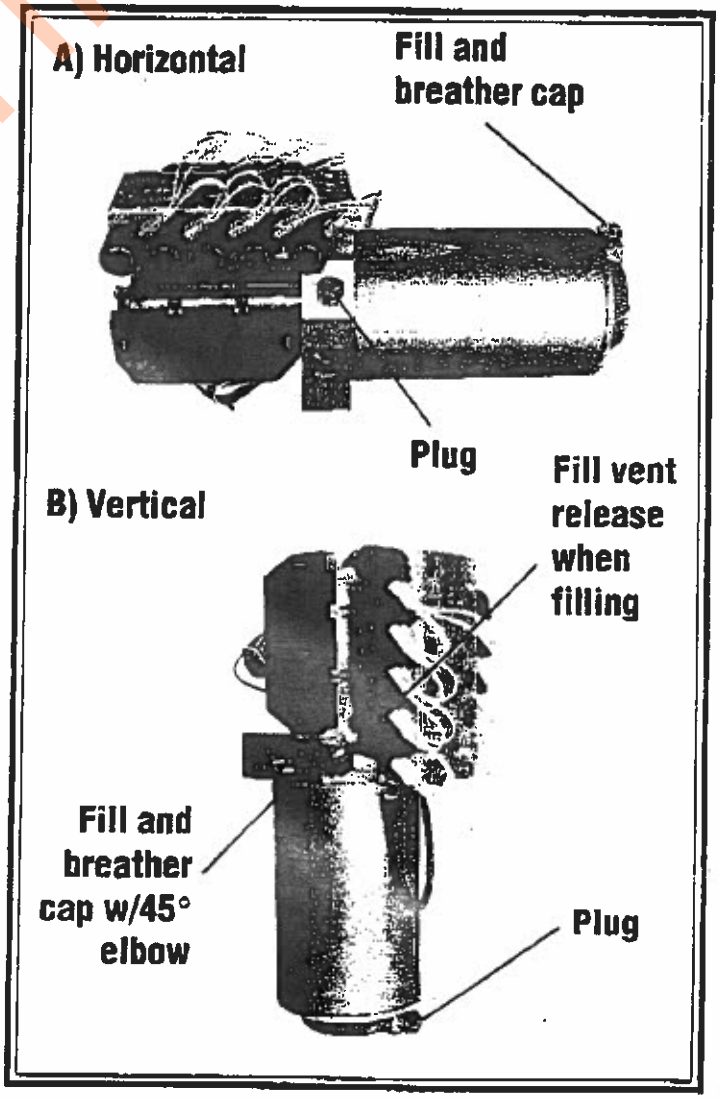

Figure 7

DISCONTINUED

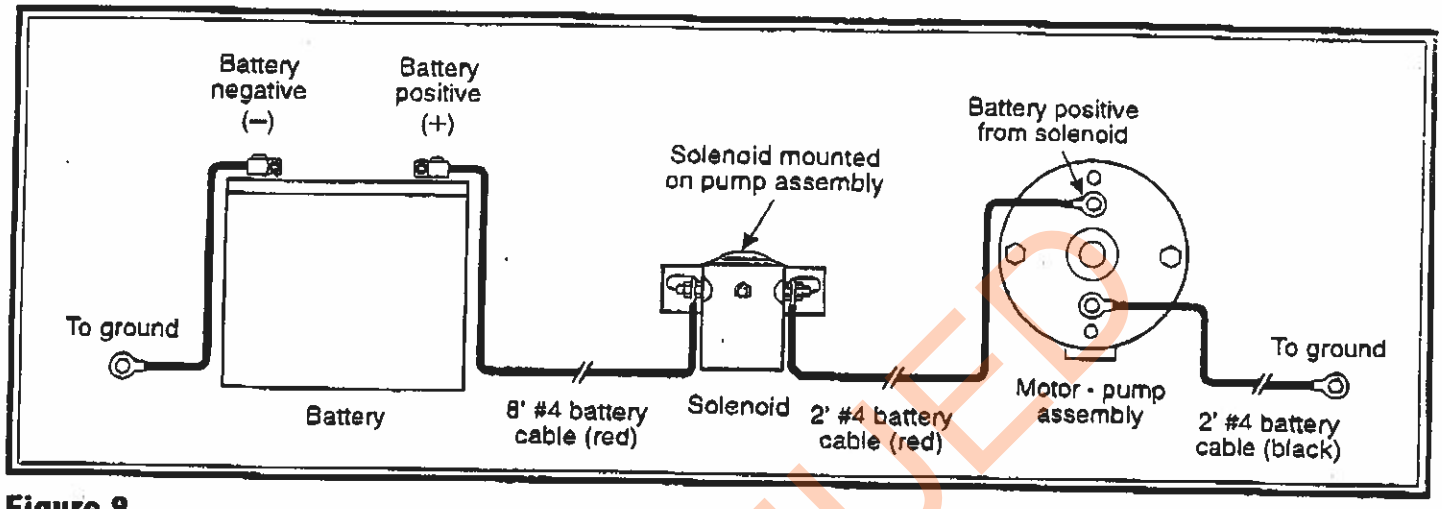

Figure 8

mounting bracket. It is recommended that the bracket be made from 3" to 4" channel, approximately 10 to 12" long. Be sure there is sufficient clearance around the assembly to allow for connecting the hoses and wiring as well as filling and checking the reservoir. Once a position satisfying these conditions has been determined, align and drill two (2) 1/2" diameter mounting holes centered 3 3/4" apart. Using the two 3/8"-16 x 1 bolts and lock washers, secure the assembly in position.

Using the 8 foot long #4 red battery cable, connect it to the stud on the pump motor solenoid and route to the vehicle battery of your RV. **Do not connect the cable to the battery at this time.**

DISCONTINUED

MOUNTING THE CYLINDER ASSEMBLY WITH WELD ON BRACKETS

Each cylinder assembly includes a mounting flange, hydraulic cylinder, lifter plate and leg assembly.

When positioning the cylinder assembly for mounting, allow adequate space for the motion of jack leg. When using the mounting bracket, the top of the bracket should be flush with the top of the chassis. Placing the bracket flush with the top of the chassis will allow for maximum ground clearance. With these conditions satisfied, clamp and weld the mounting bracket in place.

The standard bracket kit (Kwikee part number #9069480) will work with Chevrolet, Freightliner (on newer Freightliner chassis use of the factory Freightliner brackets is recommended), Spartan, Ford and light duty Ford chassis. However, depending on the placement of the levelers on the Oshkosh and Ford chassis, it may be necessary to use a set of additional mounting brackets (available from Kwikee). These brackets are only required when the levelers are mounted over the leaf springs. These brackets space the levelers out from the frame rail so that, during the extension of the levelers, the foot pads will not contact the leaf springs when they swing down. Most vehicles have space to mount the levelers behind the leaf spring perch. Use brackets only when levelers cannot be located behind the leaf spring perch brackets.

NOTE: See Appendix B for additional mounting options.

CAUTION: When welding to the chassis rail use care to avoid damaging any of the chassis equipment. This equipment includes, wiring, fuel, brake, hydraulic and or compressed air lines. Also check the opposite side of the welding surface for anything that could be damaged by the heat from the weld.

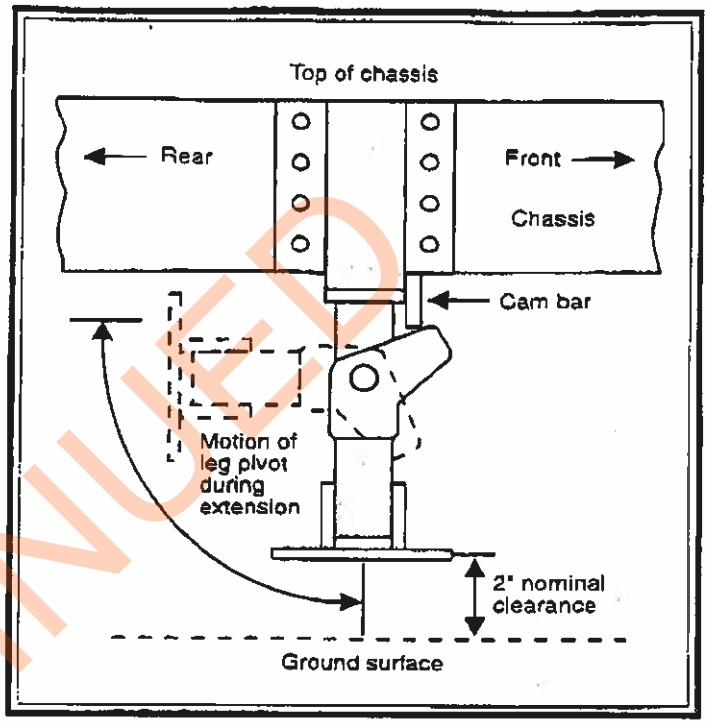

Figure 9

CAUTION: Any microprocessor controlled electronics such as engine monitoring devices and Kwikee's electrically operated entry steps should be disconnected (both power feed and ground connections) prior to welding on the chassis frame. Failure to disconnect any of these components can cause damage to the devices and void the warranty.

With all four mounting positions prepared on chassis frame, the next step is to partially assemble the hydraulic cylinder components. Refer to the illustration while completing the following steps.

Install the 90° hydraulic fitting into the opening closest to the bottom of the cylinder (See Figure 11). Insert the nontapered end with the self sealing "O" ring into the cylinder. With the nipple pointing up, tighten the fitting within the range of 50-150 in/lbs.

Install the straight hydraulic fitting in the upper threaded opening and tighten to a maximum of 150 in/lbs.

DISCONTINUED

Returning to the undercarriage with the cylinder assemblies, place the cylinders onto the mounting brackets. Locate the assembly so that the cam actuating bar is facing the front of the vehicle with the legs pivoted to the rear. Install and tighten the top two mounting bolts just enough to hold the cylinders in place.

From the uppermost position on the mounting bracket, hydraulic cylinders can be adjusted down to a maximum of 3" and maintain an adequate/tight mount. This cylinder mounting adjustment range allows for fine tuning the system (Figure 9). When the cylinder is in its final mounting position, secure the mounting bolts to 80 ft/lbs. Now install the middle and lower sets of bolts and tighten to 80ft./lbs. also.

With the cylinders secure, ground each reed switch to the chassis. Install a ring connector to one switch lead and attach to chassis using one of the 5/8" #8 TEK screws and #8 star washers. Attach the 18 gauge yellow wire to the remaining switch lead with heat shrink butt connector.

Repeat this step for each cylinder using the 18 gauge yellow wire. These wires will be routed to the pump reservoir assembly when the hydraulic lines are installed.

MOUNTING THE LEVEL SENSOR

The optional Level Sensor component of the system includes the following pieces: one sealed level sensor unit, 2 telephone type wire harness, "T" connector and mounting screws. In examining the level sensor, notice the basic shape of the piece resembles a box. A label on the surface references the direction and top/bottom orientation for mounting; **the arrow must point toward the front of the vehicle**. Mark the screw locations on the mounting surface and predrill pilot holes. Install the sensor with fasteners provided.

Insert one end of the longest harnesses into the sensor and connect the opposite end into the "T" connector which should be located near the Control Panel (See Figure 3).

DISCONTINUED

ATTACHING THE HYDRAULIC LINES

The leveling system comes with four sets of factory swaged hydraulic lines. Each set contains two lines attached together; one extend line and one retract line. All hoses are labeled extend and retract at the factory.

NOTE: To prevent debris from entering the hydraulic system and corrupting valve seals, the hose ends have been sealed with removable soft plastic plugs, Do not remove these plugs until you are ready to attach the hydraulic lines.

Starting at the right rear cylinder, attach the hose end labeled Retract to the bottom fitting on the cylinder and tighten to 50-150 in/lbs. Attach the hose end labeled Extend to the upper fitting on the cylinder and tighten to 50-150 in/lbs. (See Figure 11). Using the second set of hoses, repeat this procedure for the left rear cylinder. Using the corresponding hoses, repeat the procedure for both of the front hydraulic cylinders.

Continue routing and loosely secure the lines along the vehicle undercarriage to the pump/manifold. As you route these lines forward to the pump/manifold, use the wire ties to loosely secure them to the frame rail. Use a sufficient number of straps so that, when the lines are finally secured, they will not sag or sway when the vehicle is in motion. Do not strap the hydraulic lines to any moving or heat producing parts of the vehicle. Be sure to route the yellow reed switch wires with the hydraulic lines.

CAUTION: When routing the hoses, be sure they are not exposed to high temperature vehicle components like the engine and exhaust manifold/tailpipe; if a 12" minimum separation is not available, use of a heat shield is required; avoid routing or stretching lines over or around any sharp surface; do not secure the lines to any moving parts.

All fittings should be connected to the manifold and tightened to 50-150 in/lbs. Connect each hydraulic line's swaged fitting to its corresponding valve port fitting (labeled on the manifold) and tighten to 50-150 in/lbs. (See Figure 13).

LABEL	VALVE PORT
Left Jack Front Extend	1T
Left Jack Front Retract	1B
Right Jack Front Extend	2T
Right Jack Front Retract	2B
Left Jack Rear Extend	3T
Left Jack Rear Retract	3B
Right Jack Rear Extend	4T
Right Jack Rear Retract	4B

DISCONTINUED

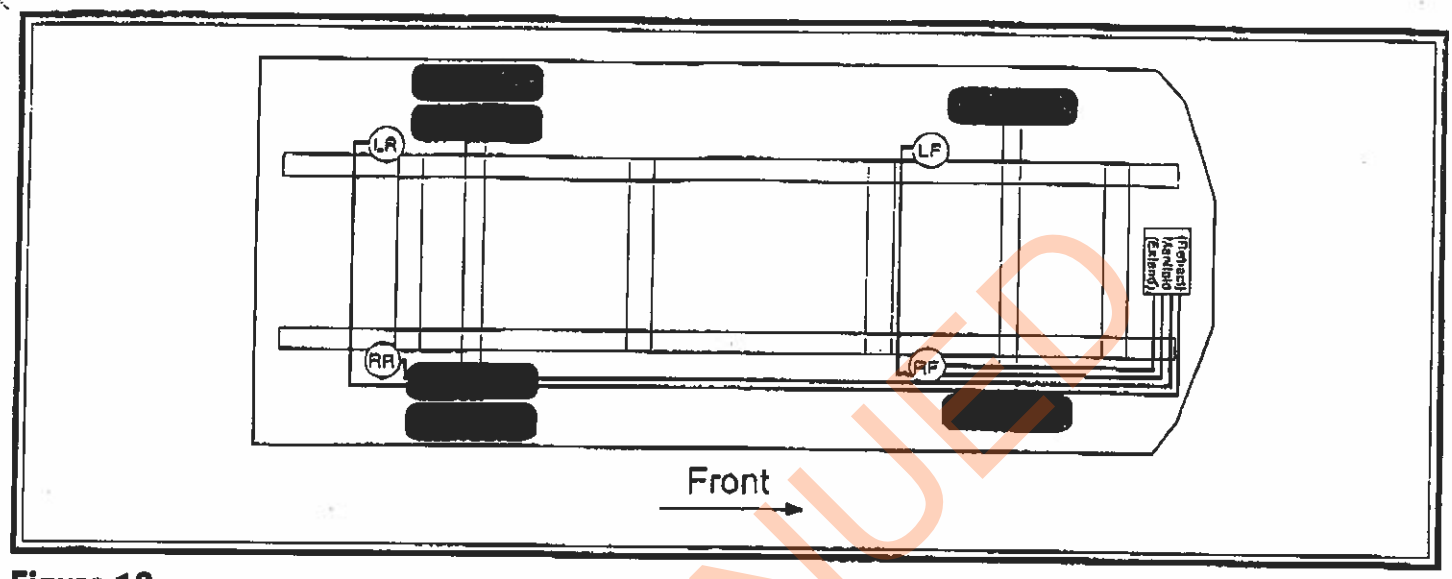

Figure 10

NOTE: The above illustration has been included to offer a reference of the hydraulic line circuits and does not represent the actual routing of the lines. It is recommended that the hydraulic lines be routed along the outside of the chassis frame rails. CAUTION: When routing the hoses, be sure they are not exposed to high temperature vehicle components like the engine and exhaust manifold/tailpipe; avoid routing or stretching lines over or around any sharp surface; do not secure the lines to any moving parts. If a 12" minimum separation is not available, use of a heat shield is required.

DISCONTINUED

Use adequate hose lengths and observe recommended radius bends (1 1/4" minimum) to avoid kinks, flattened hose and restricted flow capabilities.

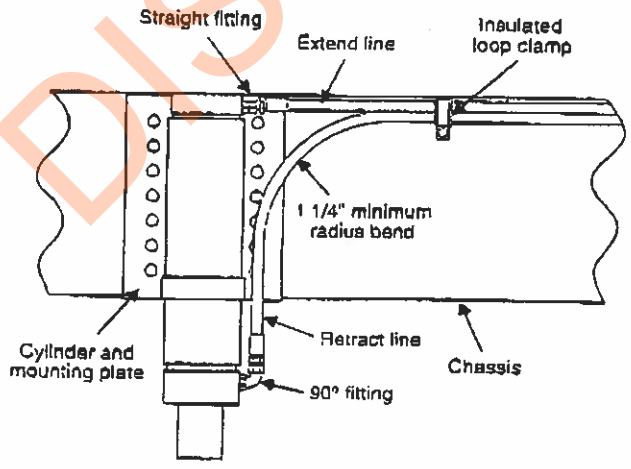

Use available fittings to avoid abrupt directional changes in the hose runs.

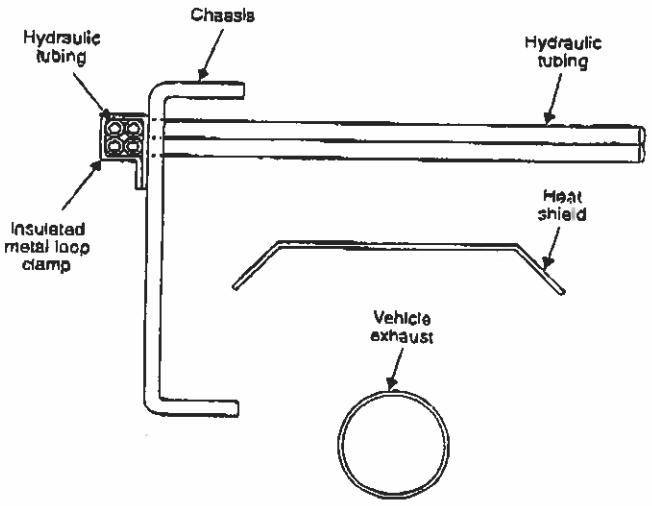

NOTE: Do not run hoses close to any heat source such as an exhaust manifold. Fabricate heat shields and/or stand offs and secure hoses as necessary. Do not fasten or strap the hose to any moving parts.

Figure 11

COMPLETING THE WIRE CONNECTIONS

With the wiring from the Control Panel routed to the motor control at the pump/manifold assembly, the next step in the installation process is completing the wire connections (see Figure 12 for wire connection information).

1. Check that all system ground harness connections are firmly attached.

2. Using heat shrink butt connectors, attach the yellow wires from the leg position reed switches to the wires at the motor control wire harness.

3. Locate the vehicle fuse box and attach the the ignition sense wire (circuit to be fused at a maximum of 7.5 amps) to an ignition activated circuit (the positive battery cable should still be disconnected).

4. The "Level Best 2000" is equipped with a park brake interlock. The interlock is designed to allow operation of the leveling system only when the vehicle parking brake is set.

In the chassis wiring harness you will need to identify the park brake signal wire. The park brake switch and signal wire will usually be found on, or near the park brake pedal assembly. This wire will show ground or 12-volts positive when the park brake is applied, the type of signal will vary from one type chassis to another. Once you have located the appropriate wire, determine the type of signal by using a volt-ohm meter while engaging the park brake. Now make a note on the type of signal you have observed for use later when programming the control panel. Next you will need to splice a pigtail into the signal wire and route the added wire to the leveler pump/motor control.

Note a majority of new class "A" motor home chassis' are now being equipped with an automatically applied park brake system. These systems automatically apply the parking brake when the transmission is shifted into park. In the chassis wiring harness you will need to identify the park brake signal wire. This wire will carry a positive 12-volt or ground signal. Once you have located the appropriate wire, determine the type of signal by using a volt-ohm meter while engaging the park brake. Now make a note on the type of signal you have observed for use later when programming the control panel. A signal wire can generally be found in one of four following loca-

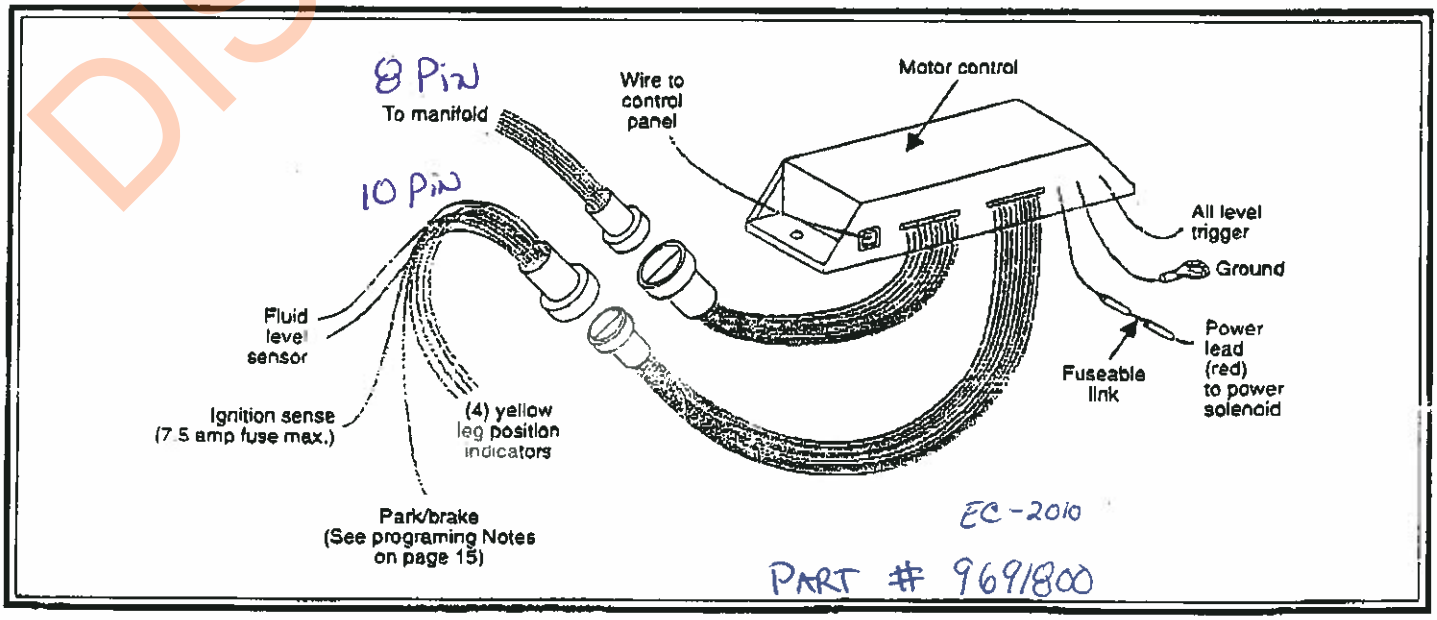

Figure 12

DISCONTINUED

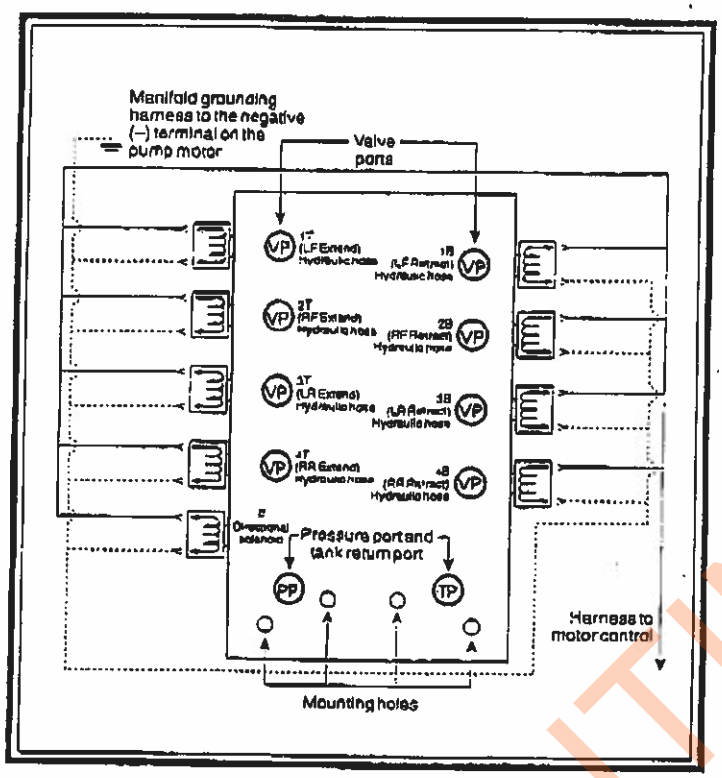

Figure 13

tions. The steering column just below the head and rim at the upper adjustment point or at the base just above the floor line. The front bulkhead wiring connector, this connector is located on the driver's side of the vehicle and can be accessed inside the vehicle under the dash or sometimes at the exterior under the hood. At the slave cylinder actuator of the park brake and possibly in the transmission wiring harness. These locations will vary by model year, and chassis manufacturer. Once you have located the signal wire you will need to splice a pigtail into this wire and route the added wire to the leveler motor/pump control.

5. The final connection is the 8 ft. red #4 cable from the pump motor's solenoid to the positive terminal on the chassis battery.

6. When installation of the leveling system and electrical wiring have been completed it will be necessary to program the park brake signal into the control panel. Programming the park brake signal requires pressing the control panel switches in the following sequences.

A. For programming a high side signal ("12" volts when brake is applied).

PRESS
1. "ON" (On LED must light)
2. "OFF"
3. "ALL UP"
4. "BI-LEVEL FRONT"
5. "BI-LEVEL LEFT"

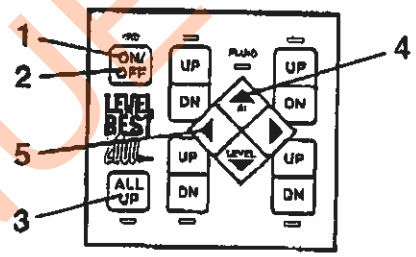

NOTE: These commands must be entered with less than two seconds between keystrokes for the programming to be accepted.

B. For programming a low side signal ("ground" when brake is applied).

PRESS
1. "ON" (On LED must light)
2. "OFF"
3. "ALL UP"
4. "BI-LEVEL FRONT"
5. "BI-LEVEL RIGHT"

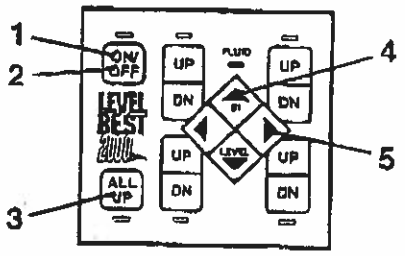

NOTE: These commands must be entered with less than two seconds between keystrokes for the programming to be accepted.

NOTE: The system already comes preprogrammed for a low side signal.

DISCONTINUED

BLEEDING THE HYDRAULIC SYSTEM

Prior to initiating the bleeding process, check to be sure that all fitting on the cylinders and the manifold have been tightened to 50-150 in/lbs. Also check that all swaged hose couplers are tightened to the fittings at 50-150 in/lbs. The entire system must be filled with hydraulic fluid during the bleeding process, it is recommended that the reservoir be filled with 1 gallon of fluid to start the process. The hoses and cylinders hold approximately 2-2.5 gallons of fluid, therefore it will be necessary to refill the reservoir three times before the bleeding is over.

NOTE: When filling and bleeding the system, use transmission fluid only. We recommend Dexron III; do not mix fluids. When checking the fluid level in the reservoir, all levelers must be in the retracted position. (ALL UP)

With the reservoir filled and the fittings checked, turn the system on at the power switch on the control panel and begin to extend one of the rear cylinders. Initially, the system contains mostly air which prevents the manifold valves from sealing and allows all cylinders to extend erratically. As the hydraulic fluid begins to fill the lines and cylinders, the manifold valves will seal and each cylinder will begin to act independently.

When the reservoir begins to run low on fluid, the resistance of the fluid within the pump lessens and the sound of the pump increases in pitch. Replenish the fluid in the reservoir at this time.

CAUTION: Do not run the pump without fluid as damage to the pump may occur. Do not engage the pump motor for periods greater than thirty (30) seconds as motor damage may occur.

WARNING: During the retracting of the jacks, the cam on the upper portion of the leg will make contact with lift plate and cause the leg assembly to swing upward; failure to stay clear of the levelers when the system is being operated can result in severe injury.

Continue to extend the cylinder until it reaches the end of its stroke, then follow by retracting all cylinders. With air in the lines, the cylinders will emit squeaking and humming noises and move in a jumpy manner; as air is purged from the system, the cylinders will move in a smoother, quieter manner. It may be necessary to extend and retract each cylinder several times to completely purge the lines of air.

When the system has been bled, retract all of the levelers and check the fluid level in the reservoir. With all cylinders fully retracted, the fluid level within the reservoir should be just visible in the filler fitting.

MANUALLY BLEEDING THE CYLINDERS

Most cylinders will bleed themselves. However, if you have difficulty with a particular cylinder during the bleeding process, it is possible to manually bleed a cylinder. Extend the cylinder all the way down and loosen the top hose fitting on the cylinder; you will hear air escaping. It is not necessary to completely remove the fitting from the cylinder to vent this air. Tighten the fitting again when air ceases to vent and only fluid is escaping. Operate the cylinder in and out several times to check for smooth operation; repeat the manual bleeding process as necessary.

DISCONTINUED

FINAL INSTALLATION AND ADJUSTMENTS

PROGRAMMING THE OPTIONAL LEVEL SENSOR

Once the level sensor has been securely fastened and all wiring completed, level the motor home using conventional bubble levels, activate the leveling system and extend the jacks until the bubbles are centered indicating that the vehicle is level. You are now ready to program the level sensor. Programming the level sensor requires pressing the control panel buttons in the following sequences. (First turn the system on and then press).

Press "OFF", "ALL UP", "BI-LEVEL" front, "BI-LEVEL" rear.

NOTE: The delay between pushing buttons must be less than 2 seconds to be accepted.

Retract the jacks and, using the yellow level lights, use the leveling system to level the vehicle (See Operating Manual). After the coach has been leveled according to the indicator lights on the Control Panel, cross check with the bubble level to assure the sensor was programmed correctly.

HYDRAULIC SYSTEM AND ELECTRICAL CONNECTIONS

Be sure all hydraulic fittings on the cylinders and manifold assembly have been tightened to 50-150 in/lbs; all hydraulic hose connections have been tightened to the fittings at 50- 150 in/lbs; all cylinder mounting bolts have been tightened to 80 ft/lbs. Check that all electrical power delivery and ground connections are securely fastened. Check for leaks.

NOTE: Be sure any holes (from interior to the exterior of the vehicle) made during the installation process have been completely sealed with a silicone sealant.

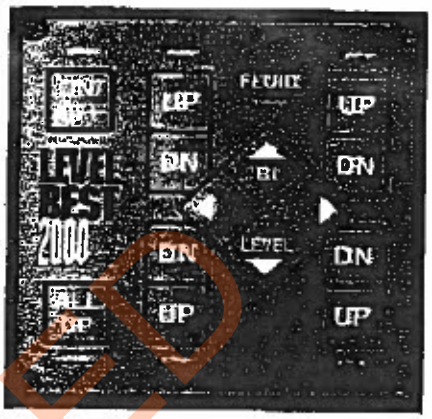

Figure 14

WARNINGS

Do not use the Level Best 2000® system as a lift for changing tires or working under the vehicle.

Never check for hydraulic fluid leaks using your hands and/or any other body part. The leaking fluid is under pressure and is capable of cutting and penetrating your skin, resulting in severe injury.

When extending the rear stabilizers, do not lift the wheels beyond ground contact. This overrides the braking effect of both the transmission's park and the parking brake. Without this braking, it is possible for the vehicle to roll unexpectedly forward (or backward) off the jacks. This could cause severe injury, or even death.

Holding a control panel button switch in the "UP" or "DN" position for a time period longer than necessary to fully extend or retract the hydraulic cylinders, can cause overheating and damage to the pump motor as well as the electrical components.

Do not use the leveler as an emergency brake, They are not designed for any type of vehicle braking purpose.

Do not use the levelers on icy or slick surfaces on which the foot pads may slip.

DISCONTINUED

ADDITIONAL INSTALLATION NOTES

DISCONTINUED