Manufactured Housing
Door Installation Instructions
Side Jamb Mounting System

General

Proper Installation is essential for the acceptable performance of this door.
Improper installation will void the warranty.

These instructions are for Kinro, Inc. doors.

Please read these instructions completely before installing the door.

1. These instructions represent an acceptable installation method. Other methods may be acceptable. Determining the acceptability of alternate installation methods is the sole responsibility of the installer, contractor, architect or housing manufacturer.

2. Appropriate personal protective equipment (such as safety glasses, gloves, steel-toed boots, etc.) should be worn during the installation process. **Caution**: Weight of products requires proper lifting techniques. Use a reasonable number of people with the required strength to carry, lift, and install the door unit. These instructions are not intended to address all of the safety issues associated with the installation of these doors; it is the responsibility of the installer, contractor, architect or housing manufacturer to establish appropriate safety practices.

3. **Kinro Inc. does not warrant that the products and instructions provided comply with all applicable building codes and regulations.** It is the responsibility of the installer, contractor, architect or housing manufacturer to insure the products and methods used in construction and installation conform to all applicable building codes and regulations.

Rough Opening Preparation

1. Make certain the rough opening (referred to as "R.O." in the remainder of document) is correctly sized and constructed. The R.O. equals the door call size in width and call height unless other wise noted on the literature (example: 34 x 76 call size = 34"' wide x 76" high). All doors are constructed to allow the tolerances as given in **Figure 2**. The R.O. sill must be square to the floor within 1/8" across its width. If the R.O. sill is out of square by a greater amount, it may not be possible to shim and square the door in the opening.

Figure 1

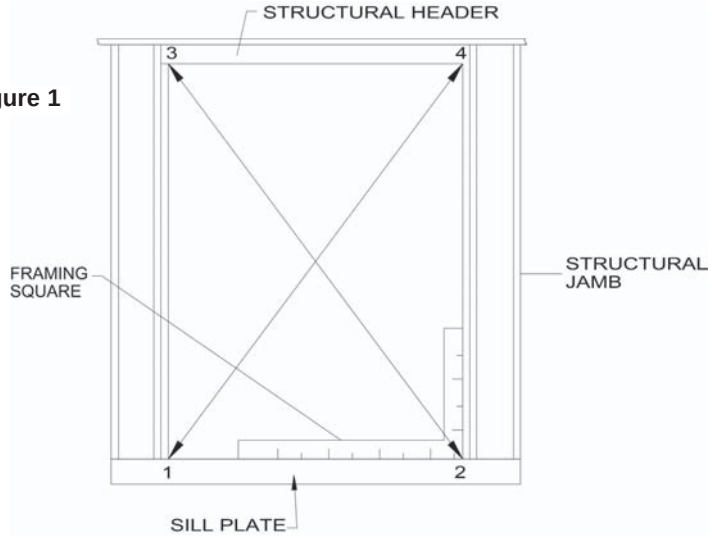

2. Check the squareness with diagonal measurements (see **Figure 1**). The difference between 1 to 4 and 2 to 3 should not exceed 1/4". If the R.O. does not conform to these requirements, it must be modified so that the sill is square within tolerance and the diagonals are within the 1/4" allowance.

3. Inspect the exterior face of the R.O. where the jamb of the door will contact. This area must not have gaps or voids in the area where the mounting jamb contacts. The sheathing or exterior wall material to which the door will be fastened must be structurally adequate so that the door unit is fully anchored.

Door Inspection and Preparation Unit

Door Terminology - Become familiar with the terminology used throughout these instructions by studying **Figure 2**.

1. Measure the door prior to proceeding with the installation to ensure that it matches the rough opening.

2. Inspect the door to ensure it has not been damaged in transport.

3. Doors must always be closed during installation. Philips doors are shipped with spacer blocks and installation clips to assist installation by maintaining a reveal between the frame and the door core until the door is fully installed. Fill any gaps or voids between the door mounting flange and the exterior perimeter of the R.O. Gaps or voids in this area may provide a path for water and air to enter.

Figure 2

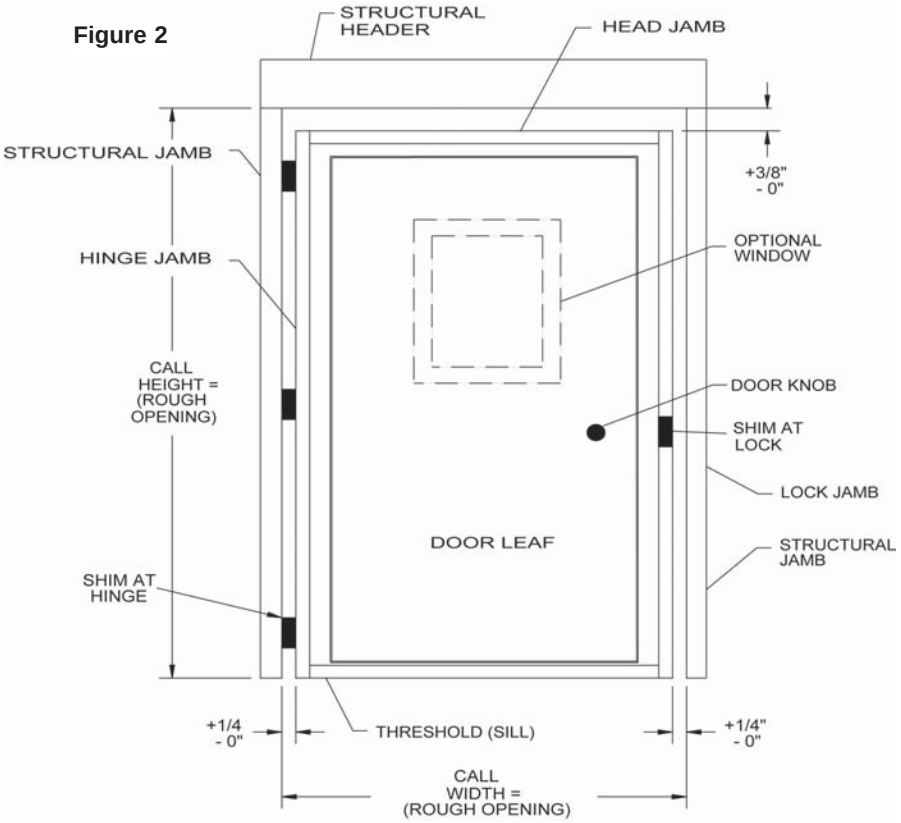

Door Installation

1 Apply a 1" continuous bead of sealant (pumpable caulk or putty tape) on the floor extending about 6” up the frame/jamb so that the outside edges (both sides) of the frame sill will be sealed to the floor, see **Figure 3**.

2. Apply a ¼” continuous bead of sealant (pumpable caulk or putty tape) to the back side of the brickmold, see **Figure 6**. (**Caution**: If the door units are pre-sealed prior to installation, a skin may form on the sealant, causing a potential for failure. Putty tape does not have this problem. Refer to the sealant manufacturer’s instructions for sealant curing time. Be sure to install the door before the sealant sets up on the mounting flange.)

3. Place the door in the R.O. with the door sill resting on the R.O. sill. If the R.O. sill is not square to the floor and if you have elected to shim the door, then place wood shims (or equivalent) beneath the low corner of the unit until the sill of the unit is square. Additional

Figure 3

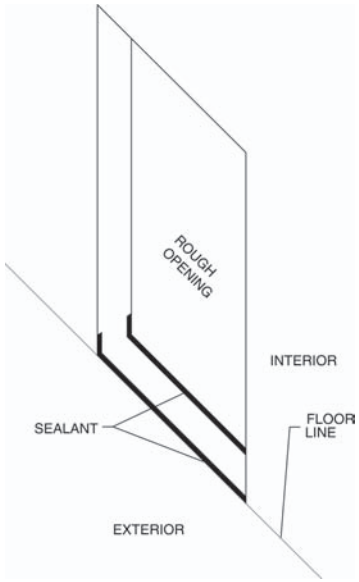

shims must be placed every 12" on center to fully support the weight of the unit. Shims should not be used at the frame head of a unit; if R.O. header deflects, building loads will be transferred to door, causing improper operation or failure of door.

4. Center the door from left to right but do not remove the sill from contact with the R.O. sill and any shims that were required to square the sill of the unit.

5. From the exterior, square the door into the R.O. and temporarily tack the door in place through the brickmold. **Note**: If scaffolding is used and interferes with the top of the door, it is acceptable to install this later when it is more accessible. When making final installation, use of corrosion resistant fasteners that penetrate the the structural member (wood framing) a minimum of 1" is required. For metal framing systems, see metal framing supplier for appropriate fastener selection. See **Figure 4** for the correct order of fastener placement.

6. From the interior of the house, place shims between the frame and R.O., at the hinge locations, at the strike plate and at fastener locations, see **Figure 5**. **Note**: Shims should only be used if there is a gap between the door jamb and sidewall studs. Do not force shims in.

7. Examine the weatherstrip along the lock jamb and head of the door. The reveal should be consistent between the core and the blind stop, and the seal should make good contact at all points.

Figure 4

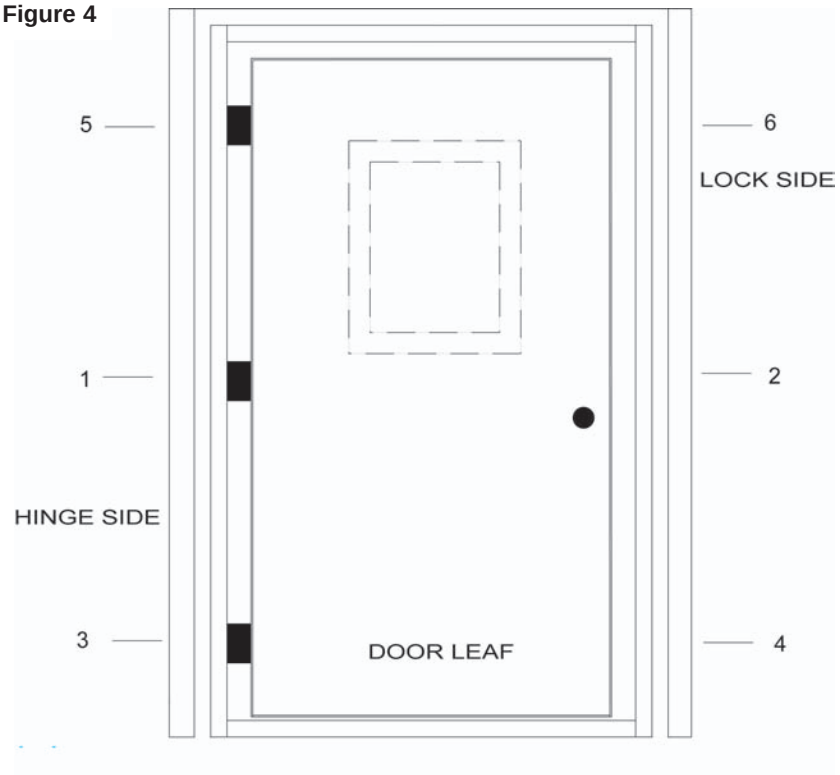

If it does not, adjust unit accordingly until a consistent reveal is achieved and the seal makes good contact with the core. Failure to do so may result in excessive air and/or water infiltration.

8. Open the door and install a fastener (provided) into all three (3) mounting jamb hinges through the open hole in the center of each hinge. Install fasteners (not provided) that penetrate the sidewall stud (wood framing) at least 1" through the jamb on the lock side. See **Figure 4** for order of placement and location. Fasteners at the lock and head may be located behind the seal when next to the R.O., see **Figure 5**. Be sure to use shims in these areas if needed. For metal framing systems, see metal framing supplier for appropriate fastener selection. **Note**: For doors with attached sidelites or swing patio doors, the fasteners at the fixed side will need to be placed through the jamb on the exterior side.

9. Once the door is securely fastened in place, remove any pre-squaring clips. Install any remaining door hardware so that when testing for proper operation, the door closes and seals properly. (For hardware installation, see instructions that are provided with the hardware.)

Figure 5

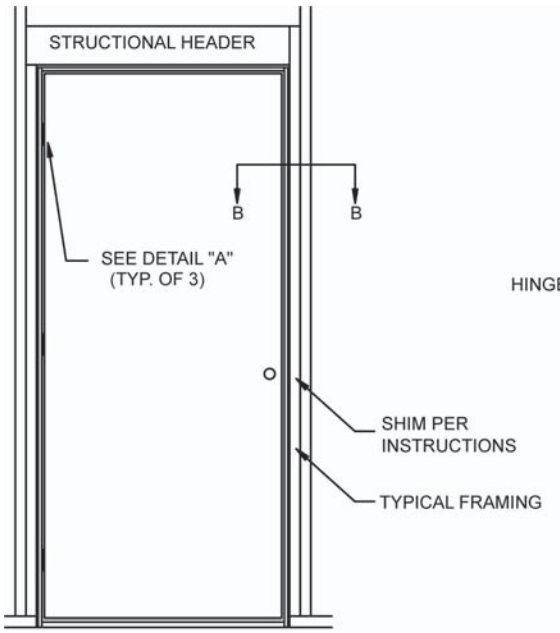

TYPICAL ELEVATION

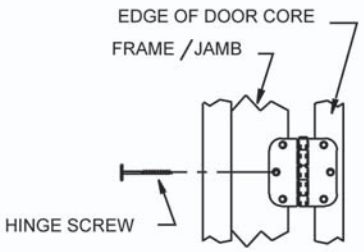

DETAIL "A"
(@ HINGES)

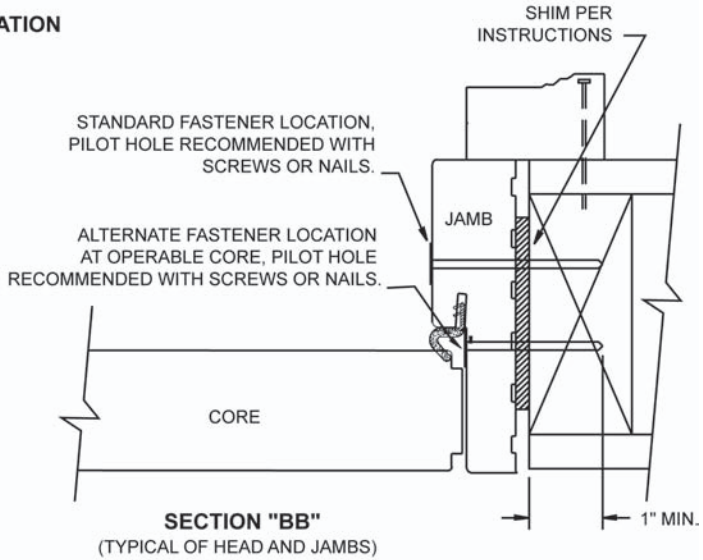

SECTION "BB"
(TYPICAL OF HEAD AND JAMBS)

Figure 6

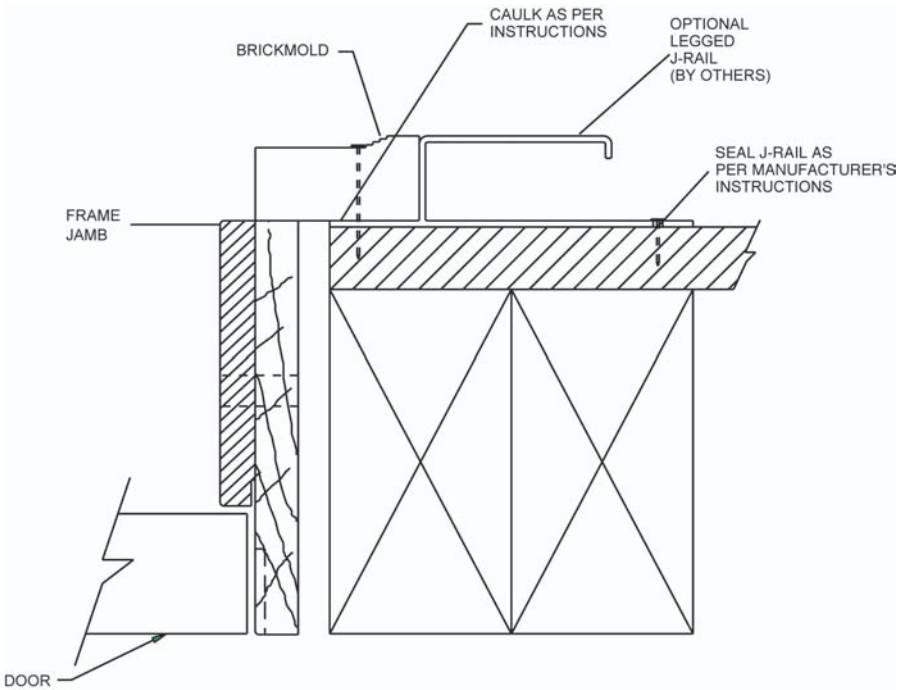

10. From the exterior, continue installation of the rest of the fasteners into the brickmold starting in the center of each member and progressing out to the corners approximately 16” O.C. The brickmold must be seated flat to the exterior perimeter of the structure. If not, caulk around the entire brickmold to seal out any moisture or air penetration.

Optional Installation Procedures

Insulation - Insulate between the door frame and the interior of the R.O. at both jambs and at the head. ***Caution:*** Do not over pack insulation, as bowed frame/jambs may result. Expandable foam type material may bow frame also, causing improper operation of the unit.

Cleaning - Do not use abrasive cleaners on the glass as they may permanently scratch or mar the surface. Any cleaners, other than a mild detergent and soft cloth, should be tried in a small corner of the door so as to check whether they damage the finish.

J-Rail - ***Warning:*** Legged J-rail (furnished by others) improperly installed may cause water or air to enter. Refer to the J-rail manufacturer for proper installation procedures. Failure to do may void the warranty (see **Figure 6**).

See Drawing 9013-03 for Residential Storm Door Installation Instructions.