SureSlide® Slide-out

OEM Installation Manual

TABLE OF CONTENTS

Introduction **3**
Safety **3**
Structural Requirements **4**
- Support 4
- Outrigger Placement 4
- Square 5
- Backers 6

Prior to Installation **7**
- Resources Required 7
- Inspect Slide-out Mechanism 7

Slide Room Opening Inspection **8**
Slide Room Inspection Height Dimension Measurement **9**
Installing Slide Mechanism to Slide Room **10**
Prepare Wall Opening for Slide Room Installation **12**
- Standard Room Opening 12
- Step Slide Room Opening 13

Slide Room Installation **15**
Required: Installation of Lippert Column Clamp **18**
- Installation 18

2-Wire Motor Electrical Controller Installation **19**
- Wire Guidance 19
- Pre-Operation Check 21
- Operation 22
- Prior to Moving the Slide-Out Room The First Time 22
- Extending the Slide-Out Room 22
- Retracting the Slide-Out Room 22
- Intelligent Control Features 23
- Modes 23
- Troubleshooting 24
- Mode Button Functions 24
- Switching Between Operating Modes 25
- Factory Reset and Initial Synchronization 25
- When to Perform a Factory Reset 25
- Performing a Factory Reset 25
- Performing an Initial Synchronization 25
- LED Indications 26

5-Wire Motor Electrical Controller Installation **28**
- Startup and Final Inspection 28

System Maintenance **28**
2-Wire Motor Wiring Diagram - Towable **29**
2-Wire Motor Wiring Diagram - Motorized **30**
5-Wire Motor Wiring Diagram **31**
- Wiring Color Code Information 31

Introduction

The Lippert SureSlide® Slide-out System is a rack-and-pinion style slide system. It uses dual 12V DC electric gear motors to extend and retract the slide room.

For additional support on this product, go to: https://support.lci1.com/sureslide-slide-outs

NOTE: Images used in this document are for reference only when assembling, installing and/or operating this product. Actual appearance of provided and/or purchased parts and assemblies may differ.

Safety

Read and understand all instructions before installing or operating this product. Adhere to all safety labels.

This manual provides general instructions. Many variables can change the circumstances of the instructions, i.e., the degree of difficulty, operation and ability of the individual performing the instructions. This manual cannot begin to plot out instructions for every possibility, but provides the general instructions, as necessary, for effectively interfacing with the device, product or system. Failure to correctly follow the provided instructions may result in death, serious personal injury, severe product and/or property damage, including voiding of the Lippert limited warranty.

⚠WARNING

The "WARNING" symbol above is a sign that a procedure has a safety risk involved and may cause death or serious personal injury if not performed safely and within the parameters set forth in this manual.

⚠WARNING

Always make sure that the slide-out room path is clear of people and objects before and during operation of the slide-out. Always keep away from the gear racks when the room is being operated.

⚠WARNING

Do not service the slide-out system unless the battery is disconnected. Failure to do so may result in death or serious personal injury.

⚠WARNING

The SureSlide® Slide-out System is intended for the sole purpose of extending and retracting the slide-out room. It should not be used for any purpose other than to actuate the slide-out room. To use the system for any other purpose may result in death, serious injury, or damage to the unit.

⚠CAUTION

The "CAUTION" symbol above is a sign that a safety risk is involved and may cause personal injury and/or product or property damage if not safely adhered to and within the parameters set forth in this manual.

⚠CAUTION

Always wear eye protection when performing service, maintenance or installation procedures. Other safety equipment to consider would be hearing protection, gloves and possibly a full face shield, depending on the nature of the task.

⚠CAUTION

Moving parts can pinch, crush, or cut. Keep clear and use caution.

Structural Requirements

NOTE: Slide mechanism is not intended to provide structural integrity for the slide room box or slide room opening.

Support

Additional support must be added for any applications that may cause the structure to deviate from square, i.e. rooms with overhangs, large rooms or rooms with heavy appliances. The floors must be supported at all points. If the inside floor overhang of the slideout room extends 8" or more past the room walls it must be supported by rollers, wear bars or wooden toe kicks wrapped in carpet.

Outrigger Placement

For units with the roller pan mounted to the floor, a minimum of six outriggers will be required (Fig. 1).

A. One outrigger must be at each end of the slide room within 3" (76mm) (+/-) (depending on wheel locations) of the edge of the wall cutout of the unit.

B. One additional outrigger must be on each side of the slide room within 24" of the edge of the wall cutout of the unit.

C. For laminate builds, two outriggers must be spaced evenly under the room, but no more than 48" apart from any other outrigger. If the room is 144" or wider, a third outrigger is required. Add an additional outrigger every 48" thereafter.

D. For stick and tin builds, two outriggers must be spaced evenly under the room, but no more than 36" apart from any other outrigger. If the room is 72" or wider, a third outrigger is required. Add an additional outrigger every 36" thereafter.

E. If you have a 12 CU. FT. or larger refrigerator in a slide-out, you are required to have two slide outriggers centered under that section of the slideout, spaced no closer than 12” and no further than 36”. If refrigerator is near tires, both outriggers need to be placed as close as possible to the refrigerator without causing tire interference. All other slide-out outrigger spacing is still applicable.

F. For slide rooms with the roller pan mounted to the wall (Fig. 2) the outrigger placement is the same as described when the roller pan is mounted on the floor. For laminate structures, 6" (152mm) of wall is recommended beneath the slide room (or adequate structure for support). For stick and tin construction, continuous support is needed for the header and footer for adequate support.

Fig. 1

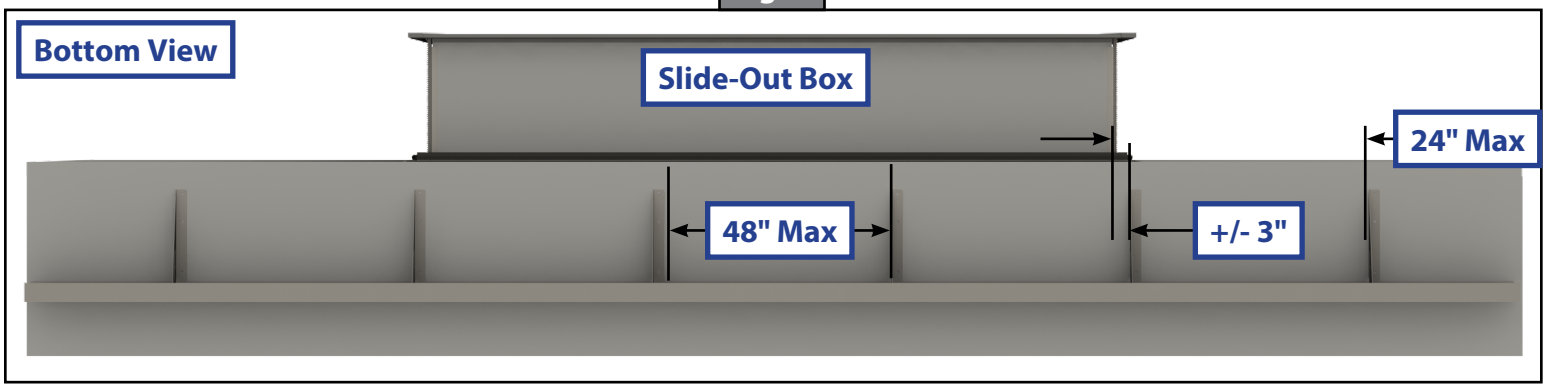

Fig. 2

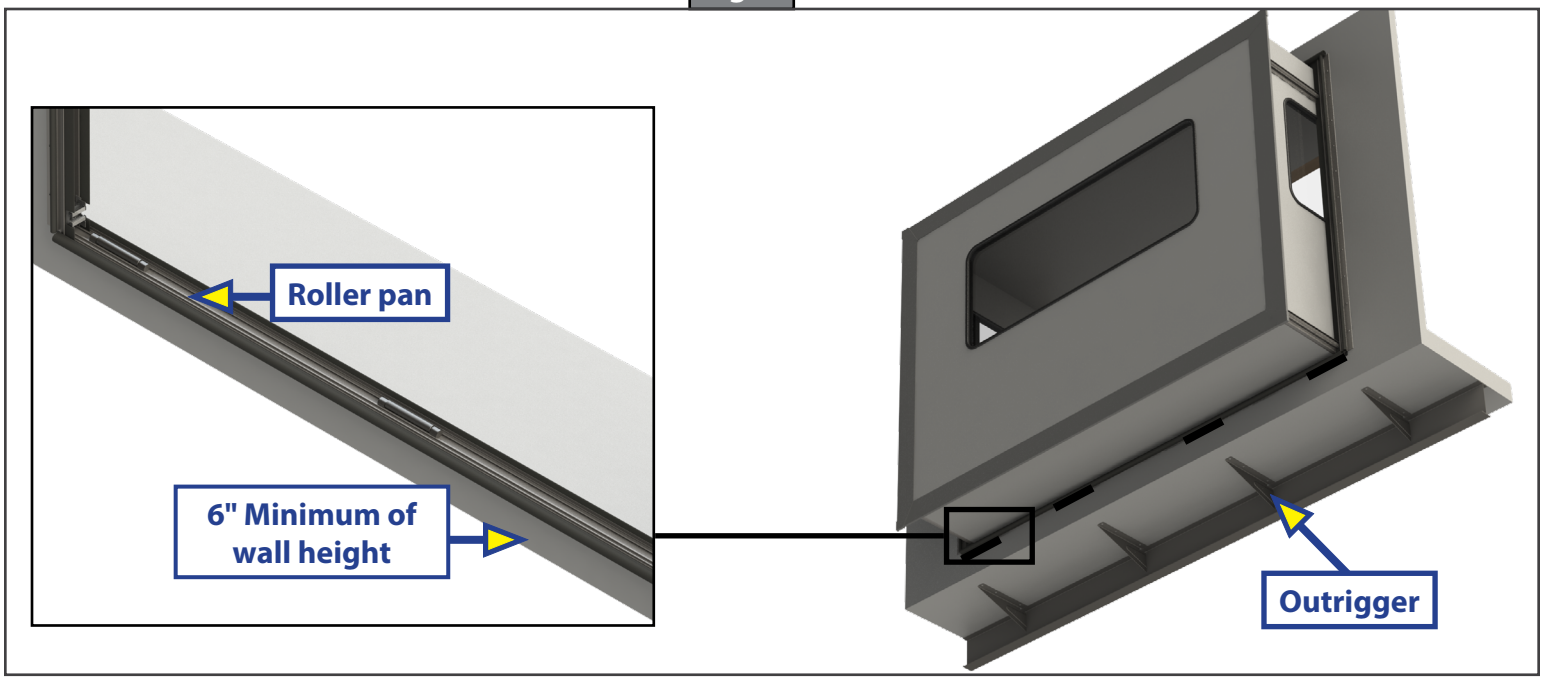

Square

The slide wall opening and the slide box (each) must not be out of square more than 1/4" (6.3mm) in any direction. The corner to corner diagonal dimensions on the slide room opening or the slide room box must not differ by more than 1/4" (6.3mm).

Backers

Backers are to be incorporated into slide room construction, positioned where the SureSlide® gear racks will be mounted. Lippert recommends the backers be a 1" x 3" .055" (25.4mm x 76.2mm 1.5mm) aluminum that is wood stuffed. See diagram (Fig. 3) of slide room with backers. The backers do not need to be stuffed with wood if the aluminum wall thickness being used is at least .125". Backer location is determined by hole center from the slide system. Measure from the top of the bottom rack to the top of the top rack.

For room depths less than 24" with no horizontal backer, the outside tube of the end wall shall be 2" wide and the inside tube shall be 3" wide.

Wall Backer Specifications	
Thickness	Structure
Greater than or equal to .125" (3.2mm)	Non Stuffed
Less than .125" to .055" (3.2mm to 1.4mm)	Stuffed
Less than .055" (1.4mm)	Not Approved

Fig. 3

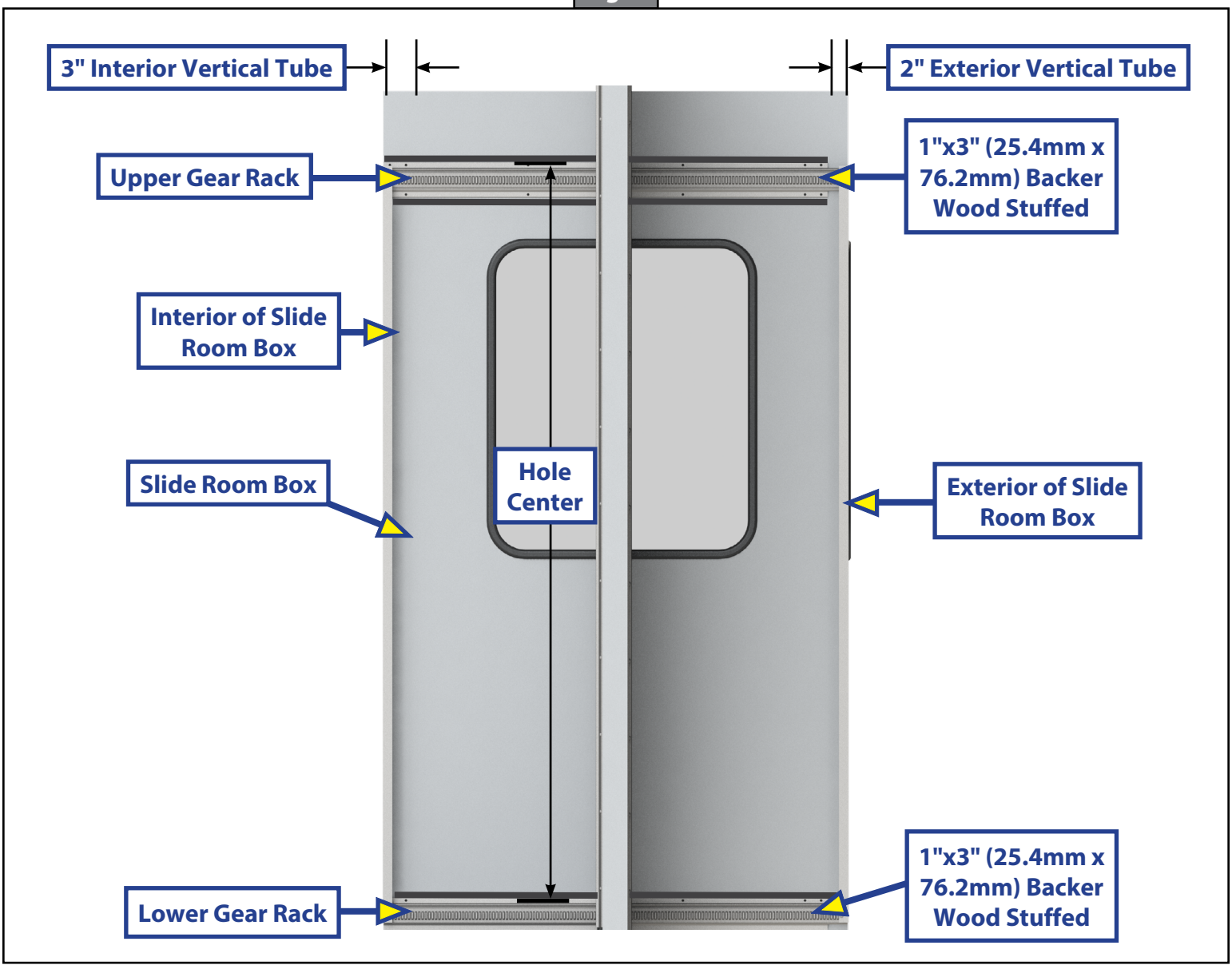

Prior to Installation

Resources Required

- Cordless or electric drill or screw gun
- Appropriate drive bits
- #10 screws
- Glue per seal supplier specification
- Sealant
- Tape measure

Inspect Slide-out Mechanism

1. Check the back side of the each gear rack to ensure there is foam tape running the entire length of the gear rack and that the paper backing has been removed from the foam tape. (Figs. 4A and Fig. 4B).

NOTE: Foam tape removed from racks for clarity.

NOTE: SureSlide® assemblies are shipped with shipping angles (Fig. 4C) to keep the gear racks parallel and to assist with the installation process. Do NOT remove shipping angles until the gear racks and fascia have been installed on the slide-out box. Premature removal of the angles results in misaligned racks.

NOTE: SureSlide assemblies will have attached shipping angles that permit installation of exterior slide room T-molding without removal of the angles. The width of the vertical exterior shipping angle leg does not extend past the gear rack flange. Installers can place the exterior shipping angle flush against the inside of the T-molding and the lower gear rack flange while squaring up to the bottom of the slide box.

NOTE: The mounting surface of the T-molding cannot exceed 1 ⅝" so as not to interfere with the gear rack being mounted flush to the side of the slide out box.

Fig. 4

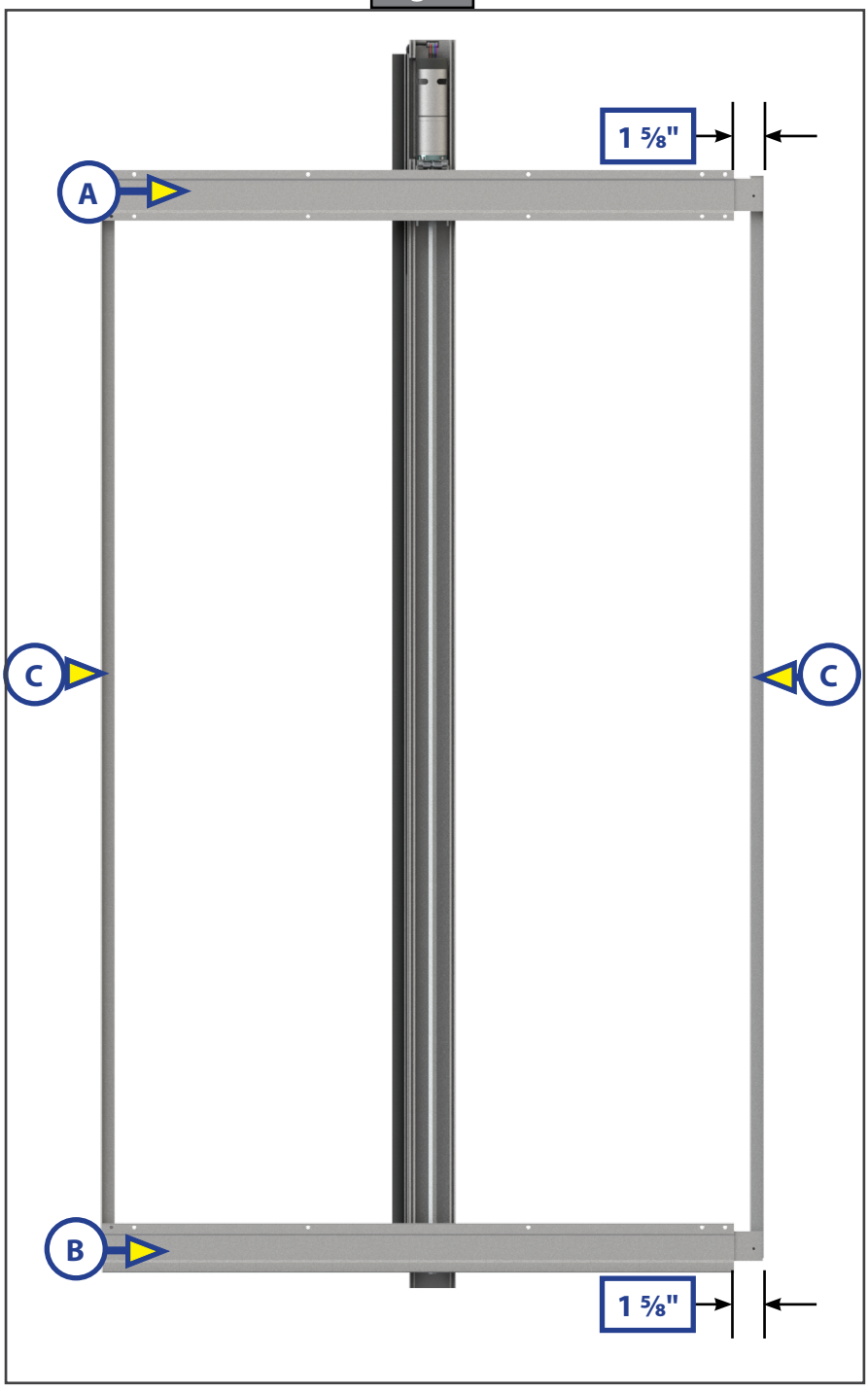

Slide Room Opening Inspection

1. Measure the slide room width and the wall opening (Fig. 5). The wall opening must be 5 1/2" (140mm) wider than the actual slide room measurement. Do not attempt to install the slide room in the wall opening if this dimension is more than 5 3/4" (146mm) or less than 5 1/4" (133mm).

NOTE: Trim must not extend more than 1-1/4" from the top of the room (Fig. 5A). Any trim extending beyond 1-1/4" must not exceed 1/4" in thickness (Fig. 5B).

Fig. 5

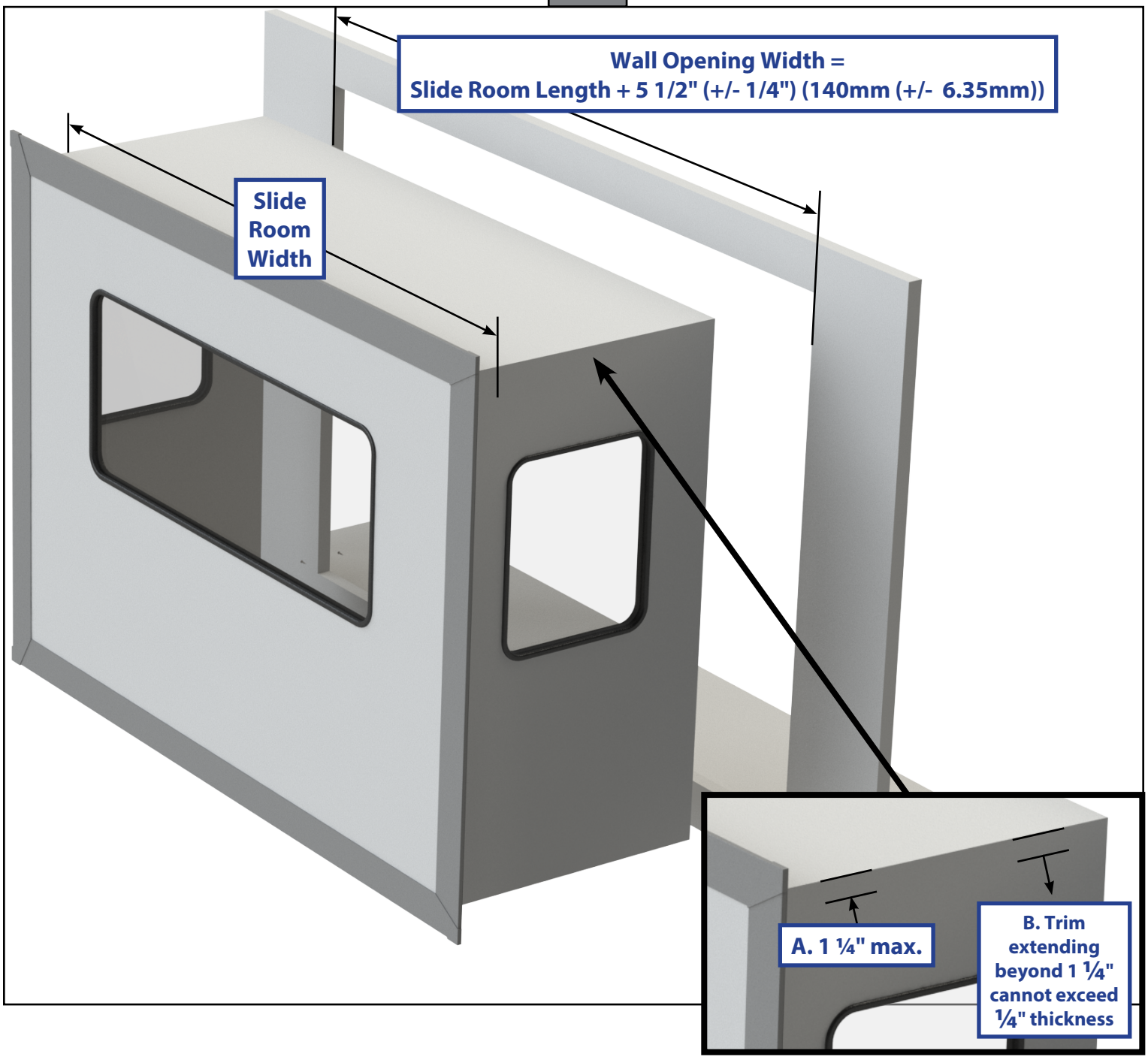

Slide Room Inspection Height Dimension Measurement

The dimensions below are needed to correctly determine room height for slide room inspection.
A Roller pan height is 1 1/4" (Fig. 6).
B Slide opening height in the unit sidewall (Fig. 6A) should be equal to the roller pan height (1 1/4") + height of slide box + a minimum 1 1/4" gap at the top.
C Height of slide box (measure from tallest point on top of roof to bottom of slide floor) (Fig. 7A).

Fig. 6

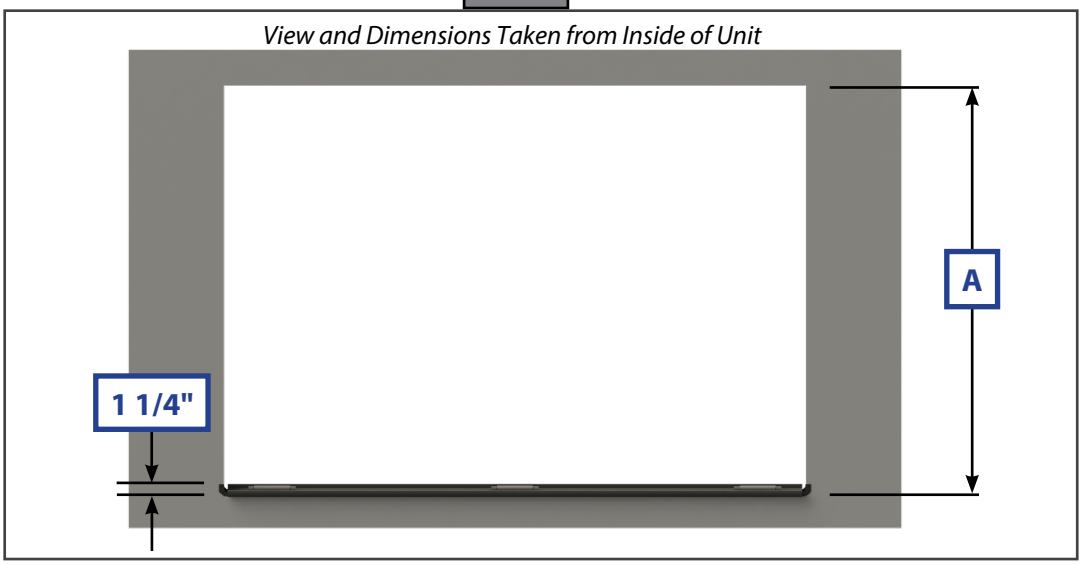

Fig. 7

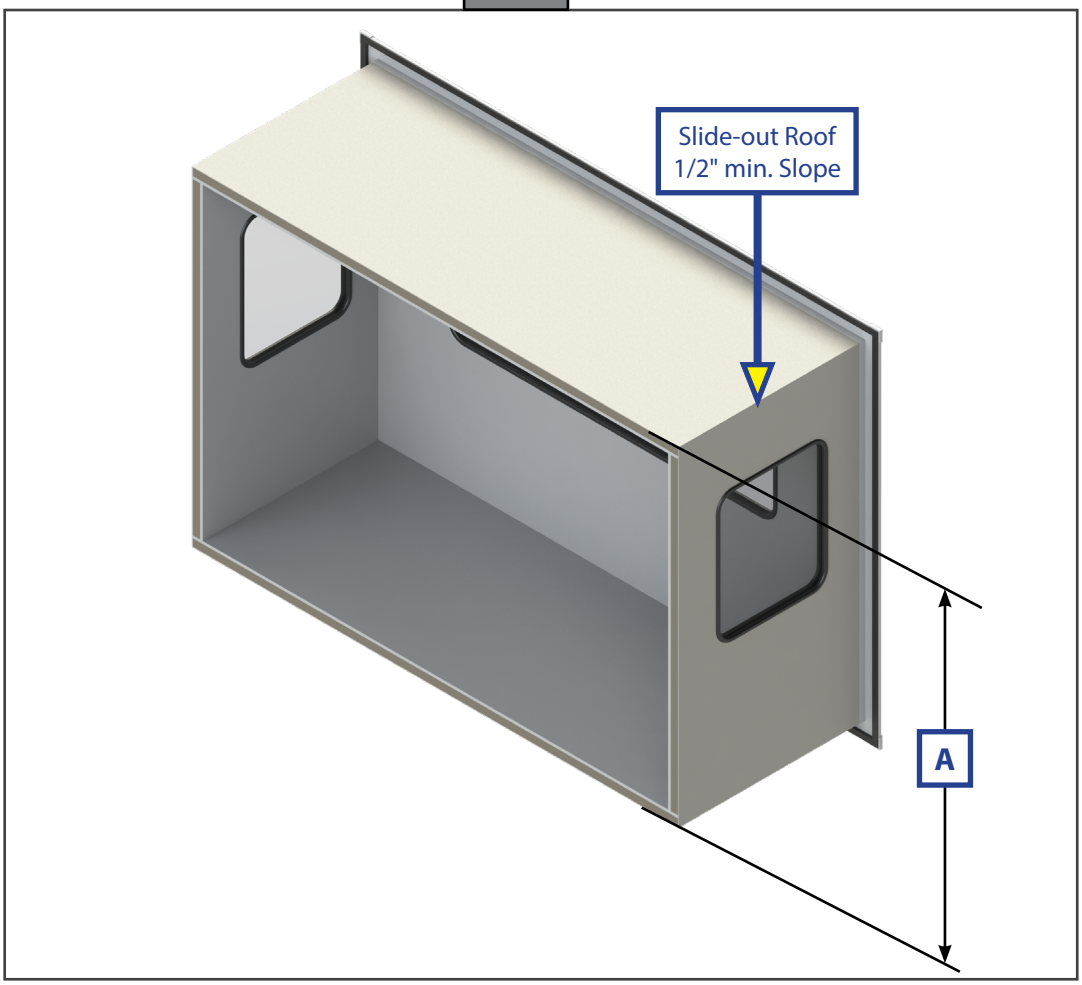

Installing Slide Mechanism to Slide Room

NOTE: The gear rack notch must be toward the exterior of the slide box and the flange of H-column will be to the exterior of the unit (Fig. 8).

NOTE: The mounting surface of the T-molding cannot exceed 1 5/8" so as not to interfere with the gear rack being mounted flush to the side of the slide out box.

1. Place the Left assembly against the left-hand side wall of the slide room (Fig. 8) while facing the unit from the outside.
2. Hook the lower gear rack installation alignment flange on the bottom of the slide-out (Fig. 9).
3. Place the installation alignment flange at the exterior shipping angle flat to the exterior of the slide room (Fig. 8A). Always align the slide-out assembly to the exterior and bottom of the slide room. At this point the system can be adjusted to a tolerance of -1/4"/+0" (-6.4mm /+ 0mm) at the interior and exterior to center the system on the wall. The gap at the interior or exterior should be no more than 1/16" (1.6mm) variance from the top gap to the bottom gap on the same end of the slide room wall.

Fig. 8

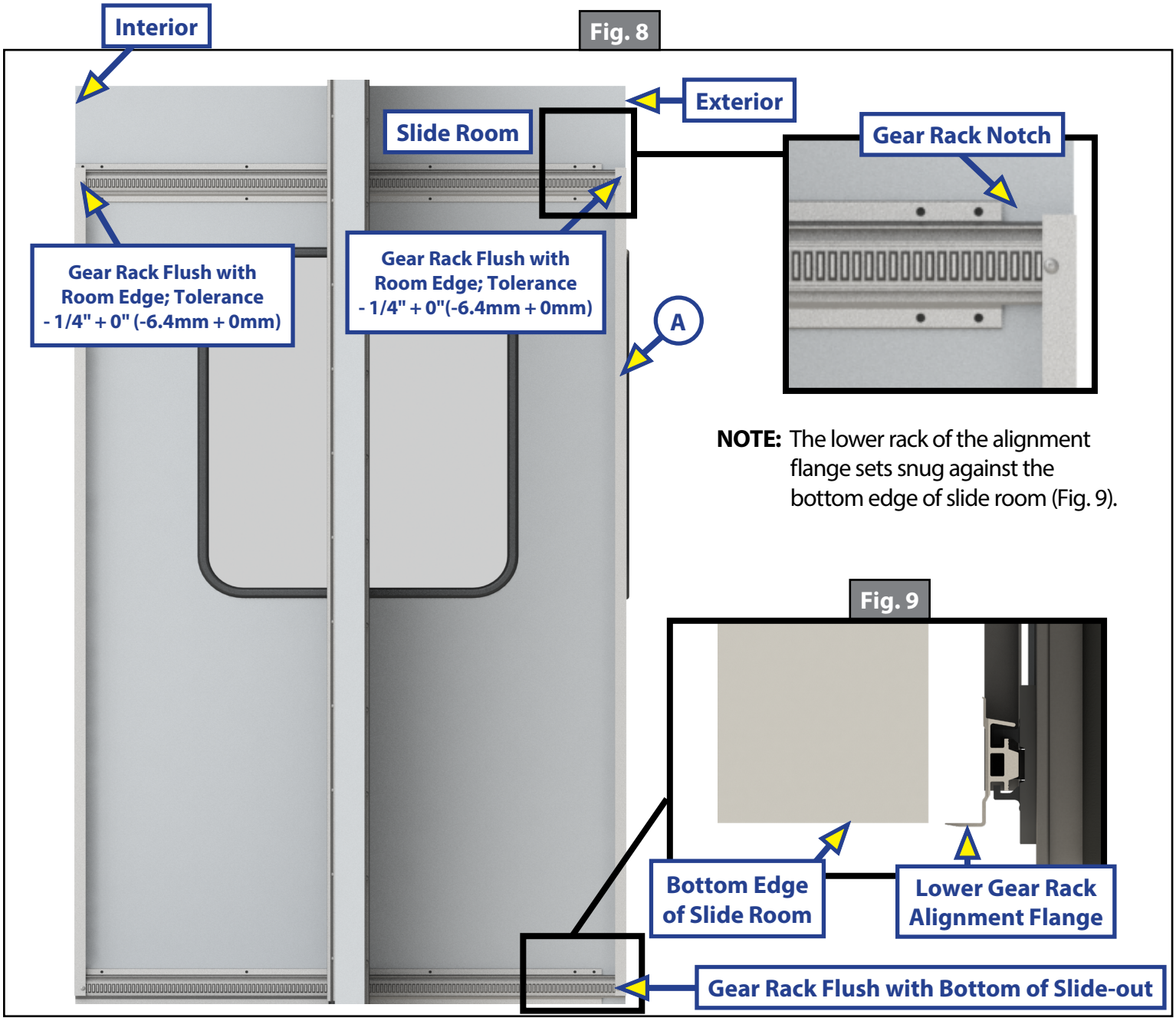

NOTE: The lower rack of the alignment flange sets snug against the bottom edge of slide room (Fig. 9).

Fig. 9

4. While maintaining alignment with the bottom and exterior of the slide room, attach the lower gear rack to the side of the slide room with #10 screws (Fig. 10). The lower gear rack will only have screw holes above the track of the gear rack. Screws should be installed secure and level.
5. While maintaining alignment with the bottom and exterior of the slide room, attach upper gear rack to the side of the slide room with #10 screws (Fig. 11). The upper gear rack will have screw holes above and below the track of the gear rack.
6. Remove the exterior shipping angle from the gear racks.
7. Repeat steps 1 through 6 for attaching the Right assembly to the right-hand side of the slide room while facing the unit from the outside.
8. Measure the hole center distance (Fig. 3) between the upper and lower gear racks at each end to make sure the racks are parallel.

NOTE: A more common practice is to hook the tape measure in the shoe track of the upper gear rack and then measure to a similar point at the lower gear rack.

9. Attach the exterior slide room T-molding, if not already installed.

NOTE: Once the T-molding has been installed, the slide room is ready to be installed into the wall opening.

Fig. 10

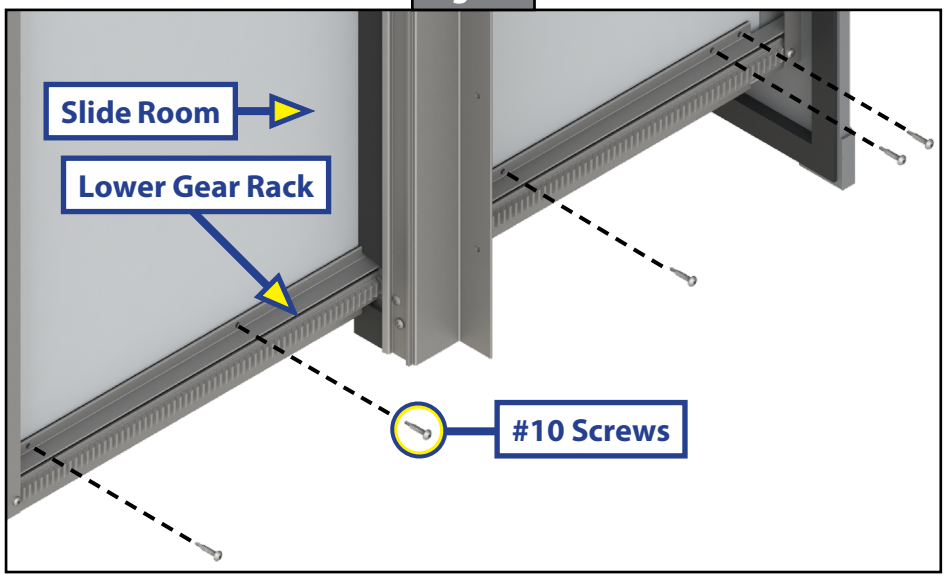

Fig. 11

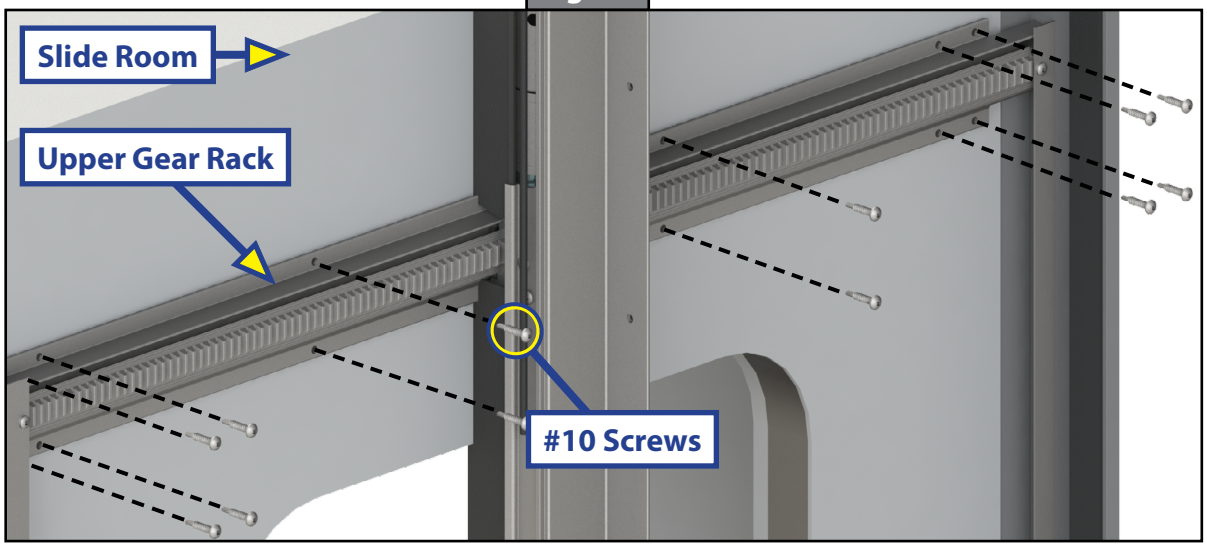

Prepare Wall Opening for Slide Room Installation

Standard Room Opening

1. Prepare upper outer wall surfaces (Fig. 12A) according to seal manufacturer's requirements to clean and prepare the area for complete adhesion of sealant.
2. Install upper wipe seal according to the seal manufacturer's guidelines.

NOTE: Corners must be at 90° with no obstructions.

3. Apply sealant to corner cups (Fig. 13). Sealant must not obstruct flow path. Adhesive sealant tape is recommended.
4. Install corner cups to roller pan (Fig. 13) and ensure that the overall length of the pan and cups is correct to the rough opening.
5. Flip the roller pan over and apply sealant tape to the entire length of the mounting flange, including the corner cups.
6. Using #8 screws, install the roller pan to the bottom of the opening (Fig. 14), making sure the roller pan is centered in the opening.

Fig. 12

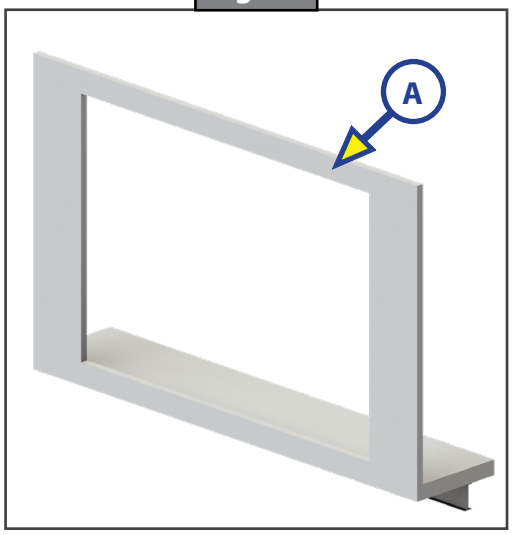

Fig. 13

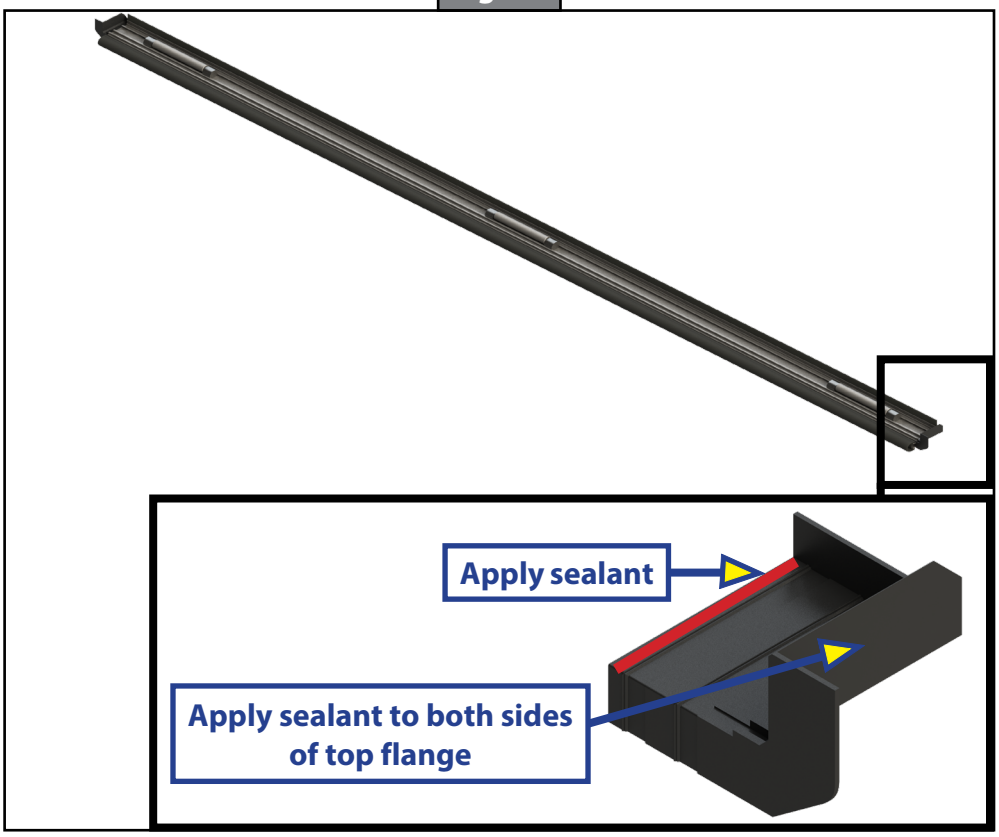

Fig. 14

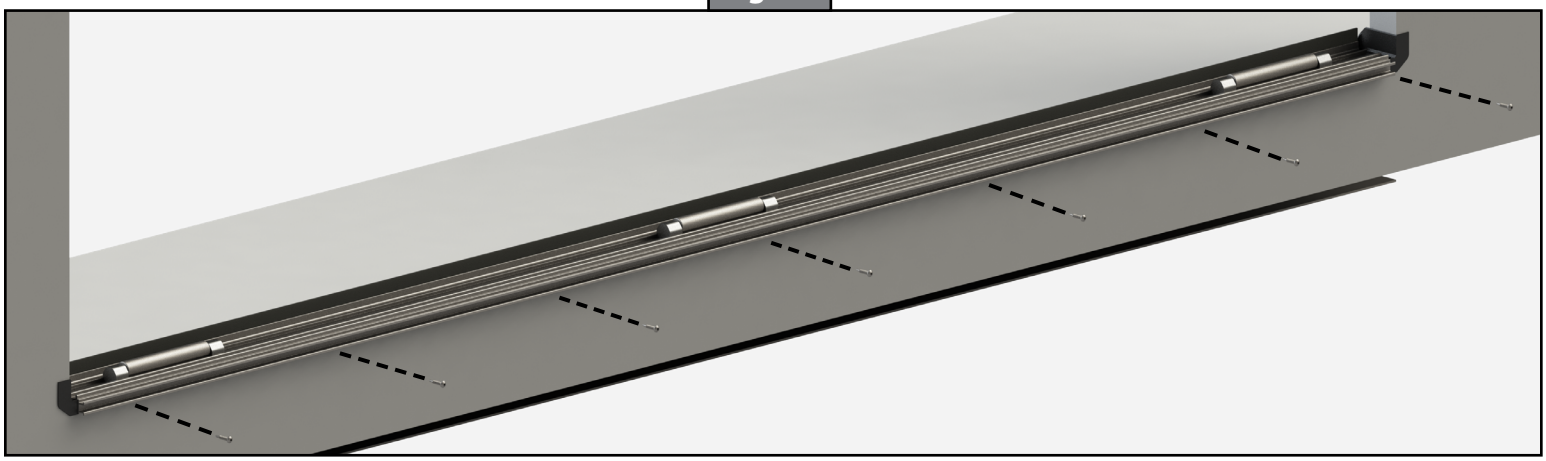

Step Slide Room Opening

Step slides will use two horizontal roller pans and one vertical pan. The vertical pan has a wipe seal but no rollers. The lower opening roller pan will use two corner cups and the upper opening roller pan will use one cup.

1. Clean and prepare upper outer wall surfaces (Fig. 15A) according to seal manufacturer's requirements for complete adhesion of sealant.
2. Install upper wipe seal according to the seal manufacturer's guidelines.

NOTE: Corners must be at 90° with no obstructions.

3. Apply sealant to the corner cups (Fig. 16). Sealant must not obstruct flow path. Adhesive sealant tape is recommended.
4. Install corner cups to the roller pans (Fig. 16) and ensure that the overall length of the pans and cups is correct to the rough opening.

NOTE: The upper opening roller pan will only use one corner cup on one end.

5. Flip the sill pans over and apply sealant tape the entire length of the mounting flange, including the corner cups where applicable.

Fig. 15

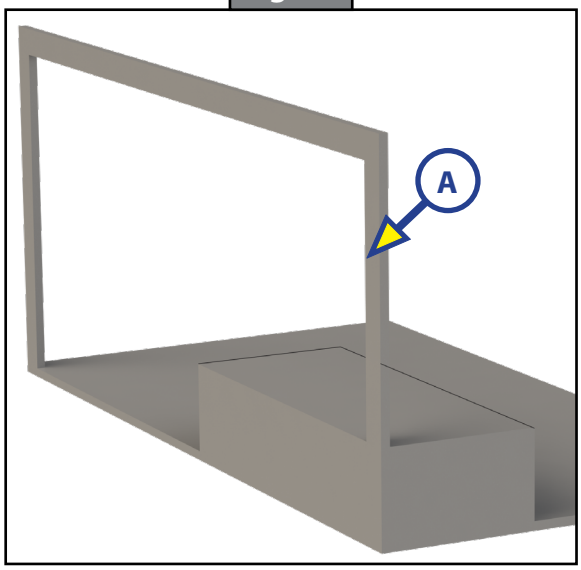

Fig. 16

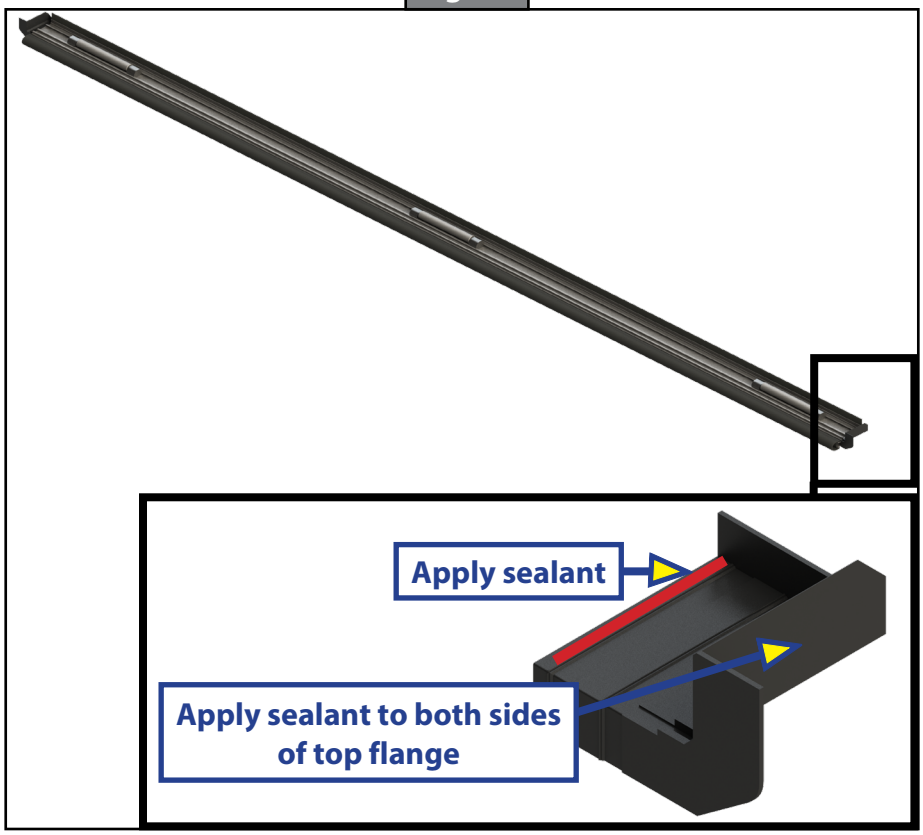

6. Using #8 screws, install the lower opening roller pan to the bottom of the opening (Fig. 17A), making sure the roller pan is centered in the opening.
7. Using #8 screws, install the upper roller pan to the bottom of the opening (Fig. 17B), making sure that the edge of the roller pan is flush with the edge of the drop (Fig. 18A).

Fig. 17

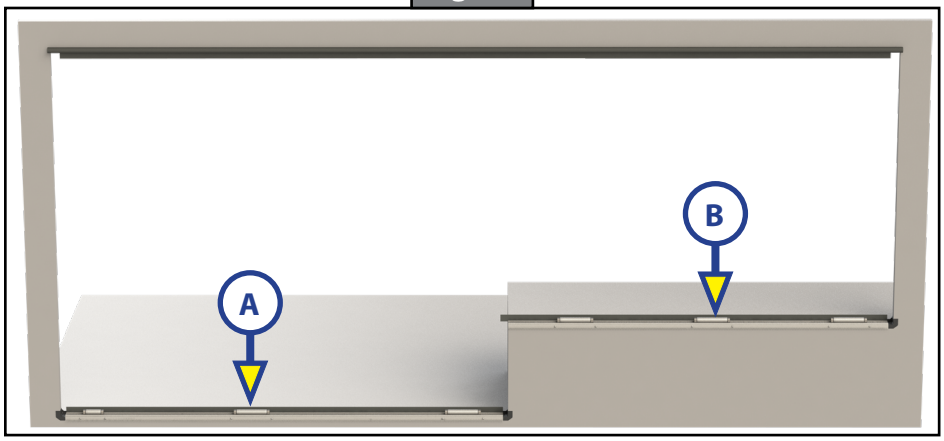

Fig. 18

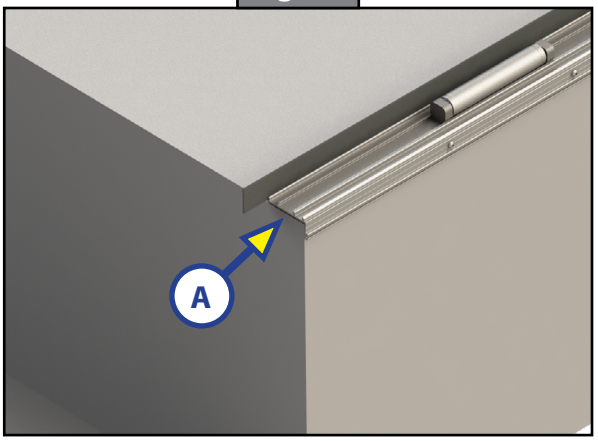

8. Using #8 screws, install the vertical pan to the drop edge (Fig. 19), making sure that any gap betwewen the edge of the vertical pan and the horizontal roller pan is minimal (Fig. 19A).
9. At the top and bottom of the vertical pan, glue the wiper seals together. The vertical pan wiper seal MUST be in front of the horizontal wiper seal for proper water shedding (Fig. 19B).
10. Using OEM best practices, seal the gap at the vertical and horizontal pan (Fig. 20).

Fig. 19

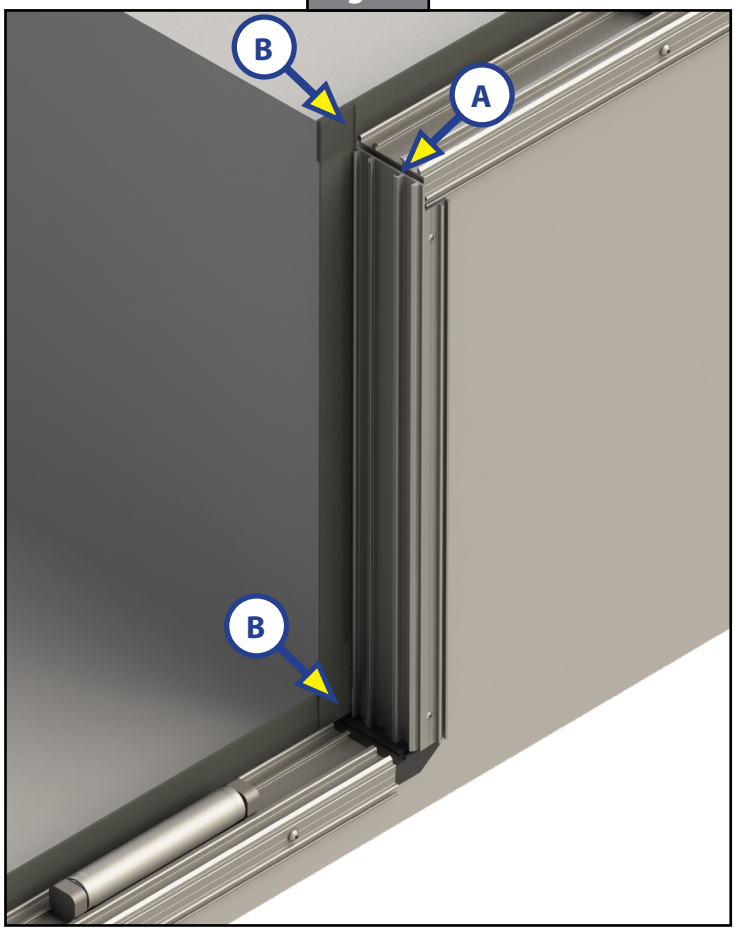

Fig. 20

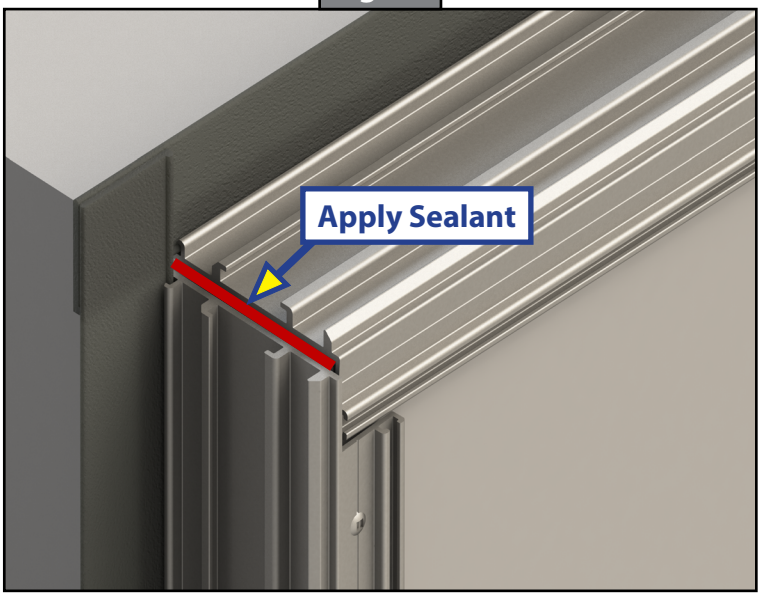

Slide Room Installation

1. Insert the completed slide room into wall opening, taking care to center "H" columns within the opening.
   A. Lower the room and verify that the "H" columns are fully seated in the roller pan (Fig. 21).

NOTE: When properly seated into the roller pan, the transition from column to roller pan should be flush with no gap (Fig. 21A).

2. Install one #10 screw in the closest hole to the bottom gear rack (below the gear rack) (Fig. 22A).
3. Install one #10 screw in the first hole above the top gear rack (Fig. 22B).

Fig. 21

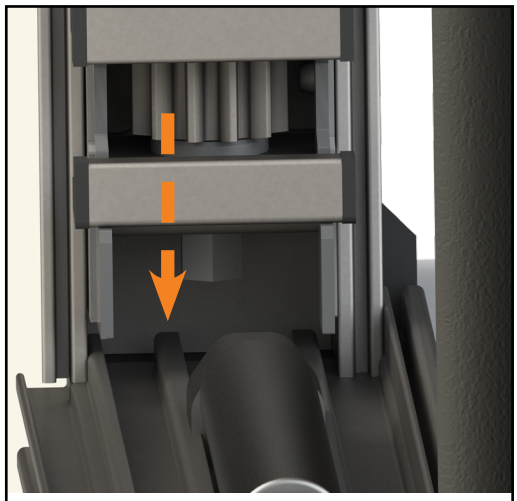

NOTE: Slide room and gear rack are hidden for clarity.

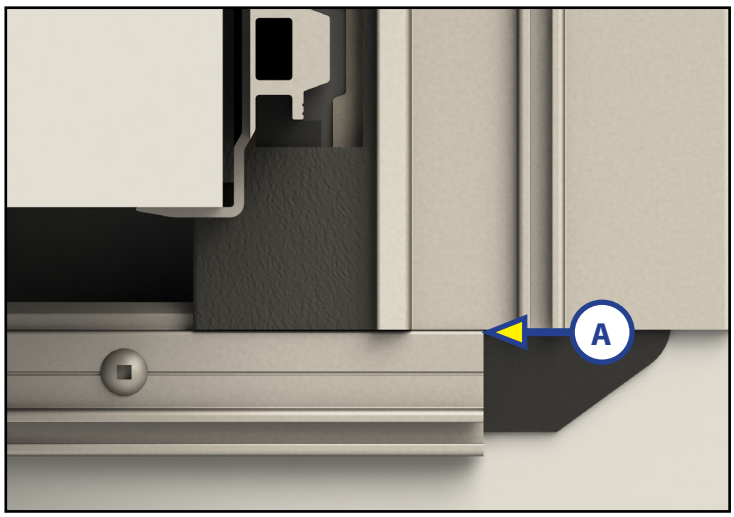

Fig. 22

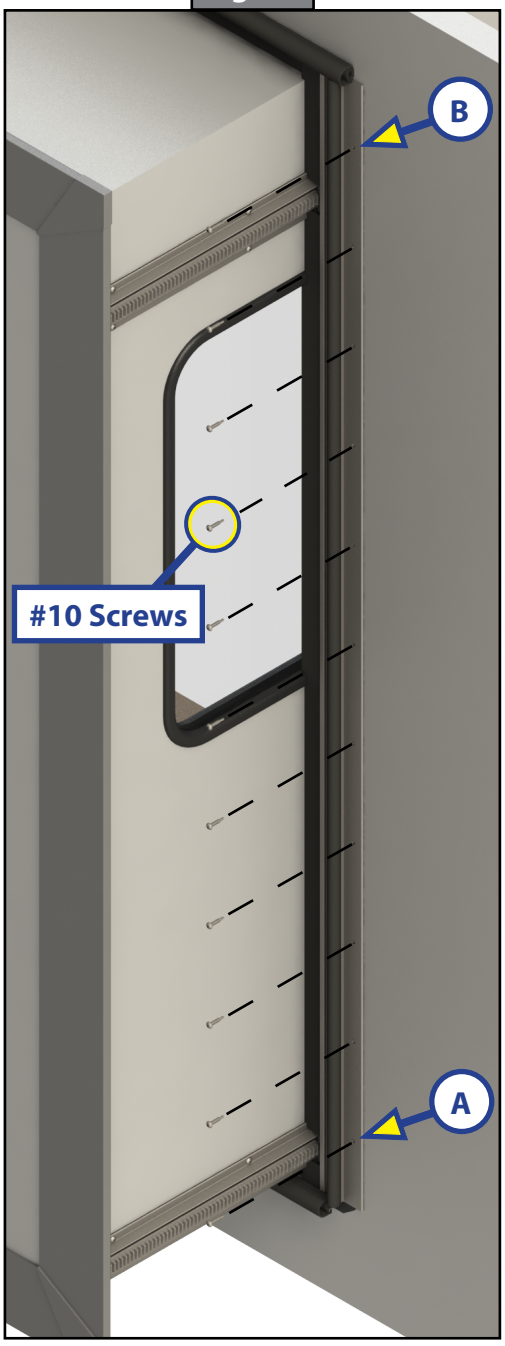

4. Finish attaching the "H" column to the wall of unit with #10 screws in the remaining holes in any order.
5. Repeat steps 2-4 on the opposite side of the slide box.
6. Remove the bearing block retention screws (Fig. 23A) and red tag (Fig. 23B) from the upper and lower bearing blocks on each side.

NOTE: Red tag (Fig. 23B) must be removed before column clamp can be installed.

7. Install column clamps on each side. See "Installation of Lippert Column Clamp" on page 18.
8. Remove the interior shipping angles (Fig. 23C) from the gear racks.

⚠WARNING

Do not attempt to operate the slide room until both the exterior T-molding and the interior fascia are attached to the slide room.

Fig. 23

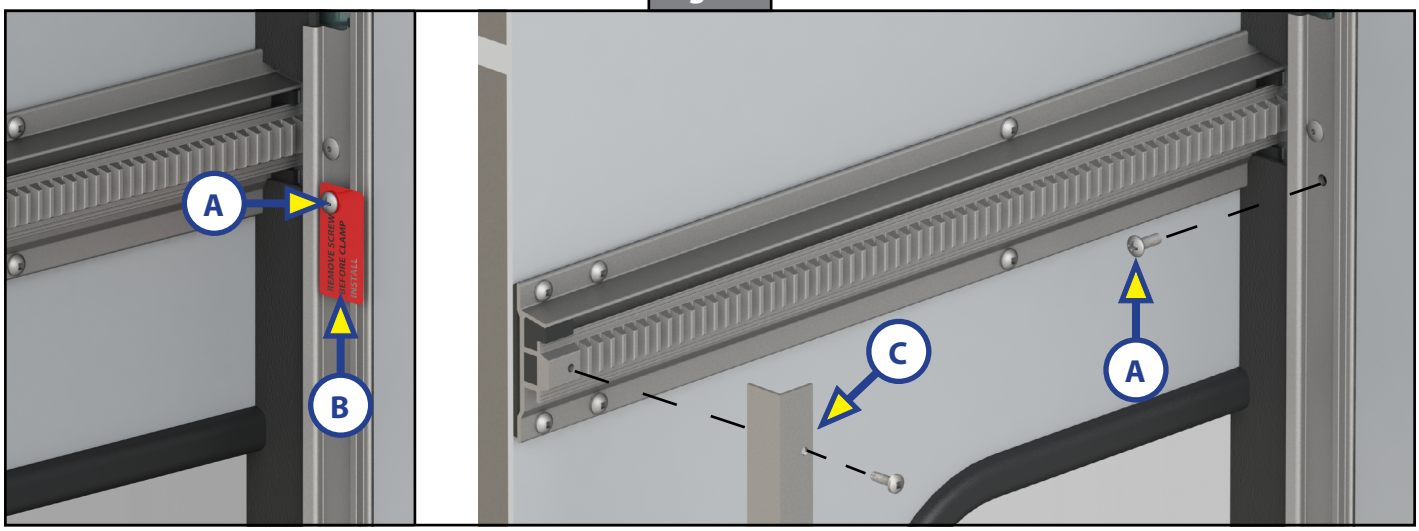

⚠ CAUTION

SureSlide Slide-out may apply additional force to the room fascia and T-molding as compared to other slide systems. Adherence to the minimum requirements as outlined is recommended.

9. Attach the interior slide room fascia (Fig. 24).
   A. Inner fascia must be a minimum 3/4" thick.
   B. Structural horizontal to run over the top of the vertical (Fig. 24A), finishing boards to overlap the opposite direction (Fig. 24B).
   C. Fasteners must be #10 screws spaced every 6" to 8".
   D. Substrate must be minimum .055 thickness aluminum tube and must be wood-stuffed.

Fig. 24

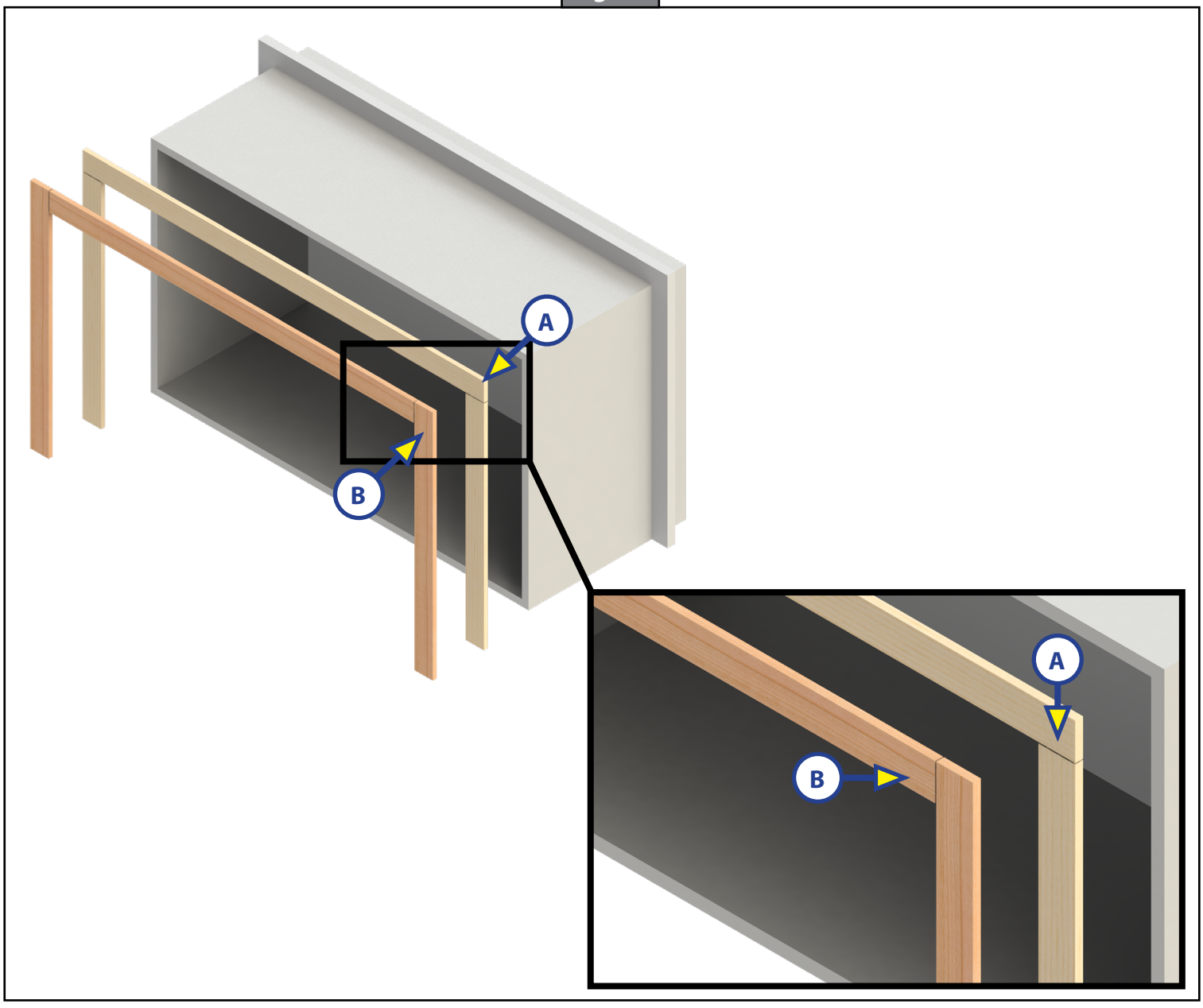

10. Per seal supplier specification, apply glue to the back of the upper wipe seal and adhere it to the exterior surface of the SureSlide aluminum column.

Required: Installation of Lippert Column Clamp

Lippert column interior clamps **MUST** be utilized for installed SureSlide® systems.

Installation

1. Place the column clamp (Fig. 25A) on the interior of the slide system (Fig. 25B). The clamp should be resting on the bottom corner cup and overhanging the wall (Fig. 25 Detail).

NOTE: Use self-drilling screws or drill pilot holes.

2. Use #10 screws to fasten the In-Wall column clamp to the wall of the unit.
3. Repeat steps 1-2 for the opposite side.

Fig. 25

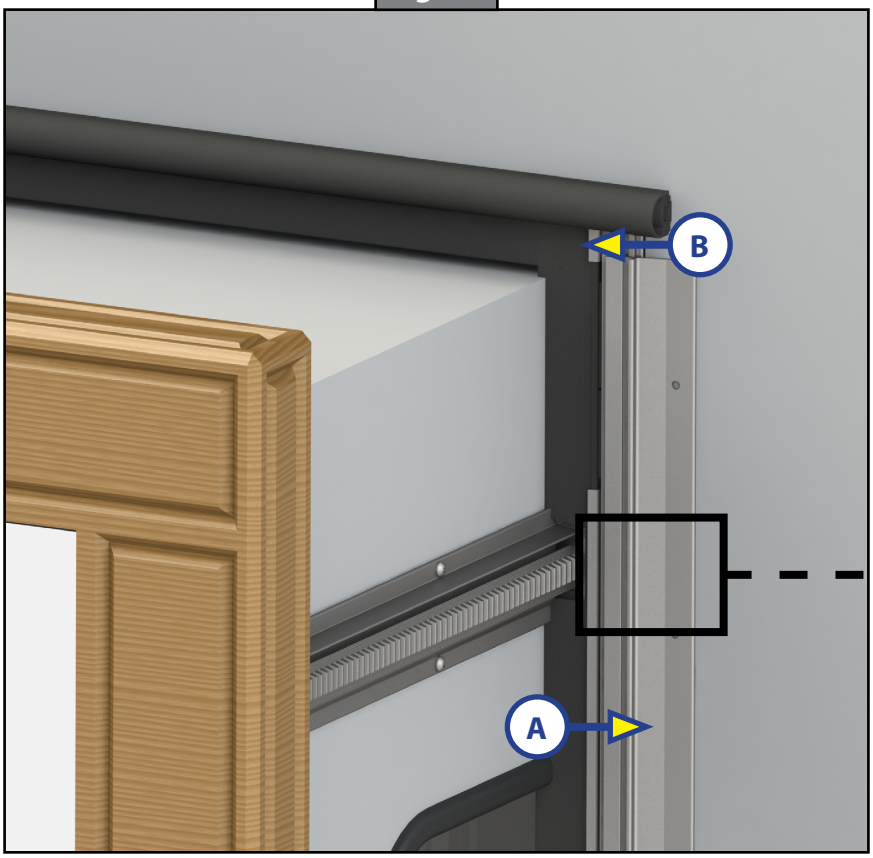

Fig. 20 Detail

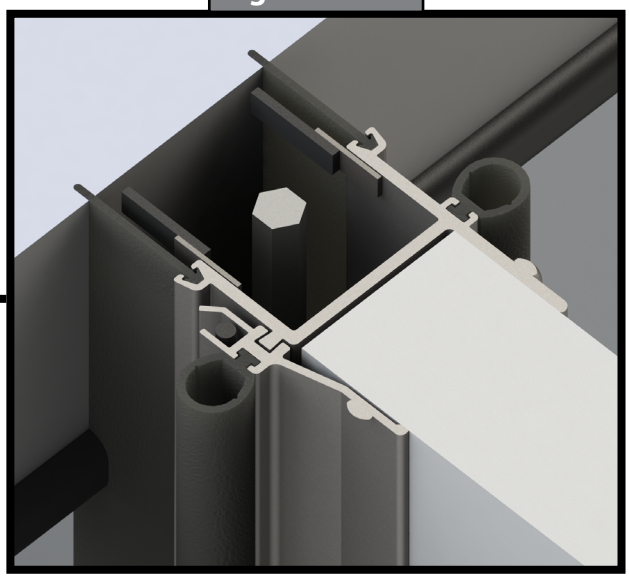

2-Wire Motor Electrical Controller Installation

Wire Guidance

Use recommended wire gauges for the length of the wire harness. Using undersized wires can impede operation of the slide. Using oversized wires can cause the controller to detect false short-to-ground faults.

Power-to-Controller Wires

Wire Length	Minimum Wire Size	Maximum Wire Size
Up to 30'	10 AWG	10 AWG
30' to 40'	10 AWG	8 AWG
Greater than 40'	8 AWG	8 AWG

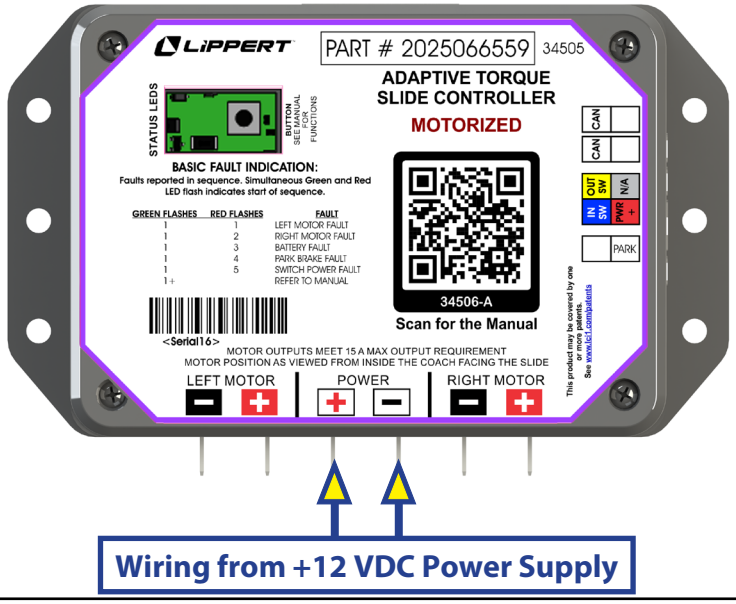

Controller-to-Motor Wires

Wire Length	Minimum Wire Size	Maximum Wire Size
Up to 10'	14 AWG	14 AWG
10' to 20'	14 AWG	12 AWG
20' to 30'	14 AWG	10 AWG
Greater than 30'	10 AWG	10 AWG

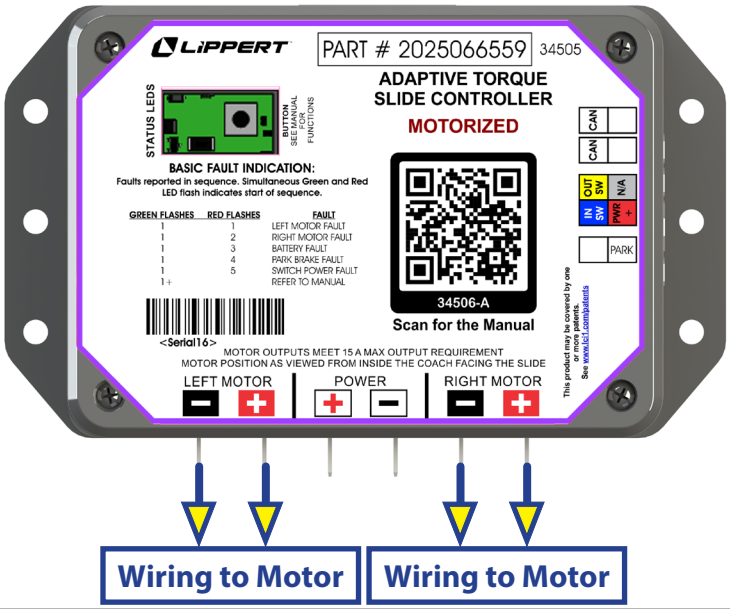

NOTE: The controller will accept a rocker switch input by a four-pin Molex connector (recommend 39-01-2045 or equivalent). The OEM is responsible for supplying the mating connector to the controller connector (Molex P/N 39301040).

1. The controller is not waterproof. Mount the controller in a clean, dry and weathertight location that will keep it from being damaged but is easily accessible for service. Use #8x1" wood screws or equivalent.
   A. **Controllers may NOT be mounted in an LP tank storage area.**
   B. The controller (Fig. 26) must be mounted with the face visible, allowing the indicator lights and mode button to be accessible for resetting and troubleshooting purposes.
   C. OEM-supplied wire and circuit protection to be 10 AWG wire with 30 amp circuit protection installed in-line between the power supply and controller. All wiring to conform to RVIA standards.

NOTE: Wiring from motors to controller must be minimum 14 awg and no more than 30' in length.

2. Label the motor wires at both ends to aid in connecting to the controller and motors.
3. Route the motor wires from the slide-out motors to the controller. Make sure they are fixed clear of any moving parts of the slide room assembly.
4. If installing in a motorized unit, route the park brake input harness from the park brake signal source to the controller.
5. Plug wires into controller.
   A. The controller has connections on two sides (Fig. 26). The connections on the bottom are for power into the controller and extend and retract outputs to each motor.
   B. The connections on the side (Fig. 26) are for an external switch, a parking brake input (motorized only) and CAN communications to OneControl systems.

⚠ CAUTION

When connecting power to the motor, ensure the motor spade terminals are connected before attaching 12V power and ground. Attaching 12V power or ground directly to the motor inputs can damage the controller.

NOTE: On the four-pin switch receptacle on the side of the controller (Fig. 26), pin 1 is not used. Pin 2 is Switch Power Output (+12V). Pin 3 is Switch Out. Pin 4 is Switch In.

Fig. 26

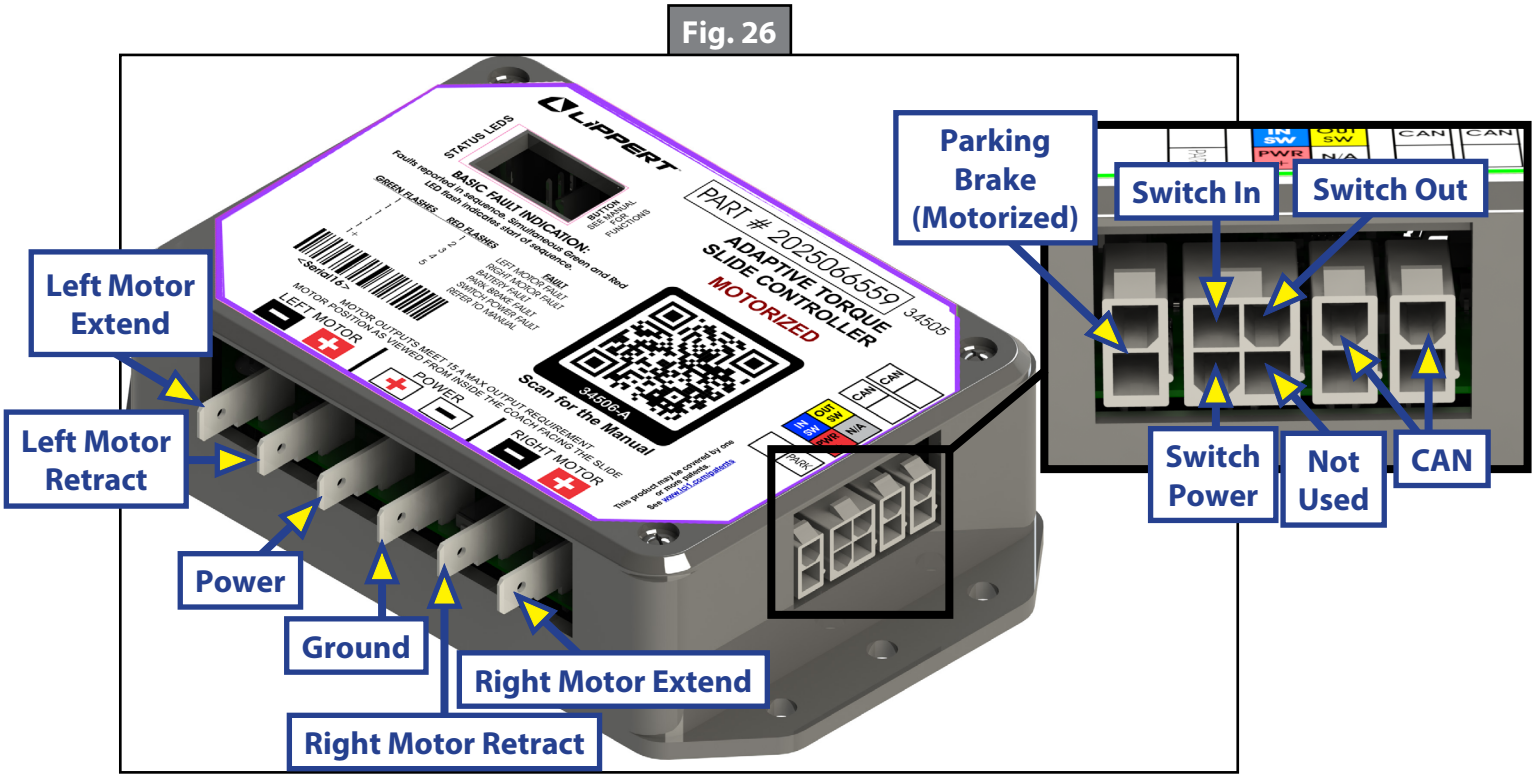

NOTE: It is important the slide-out motors are plugged into the proper receptacle at the controller. The motor connections are labeled Left Motor and Right Motor. These correspond to the orientation of the motors on either side of the slide-out when facing the slide-out from the inside of the RV (Fig. 27).

Fig. 27

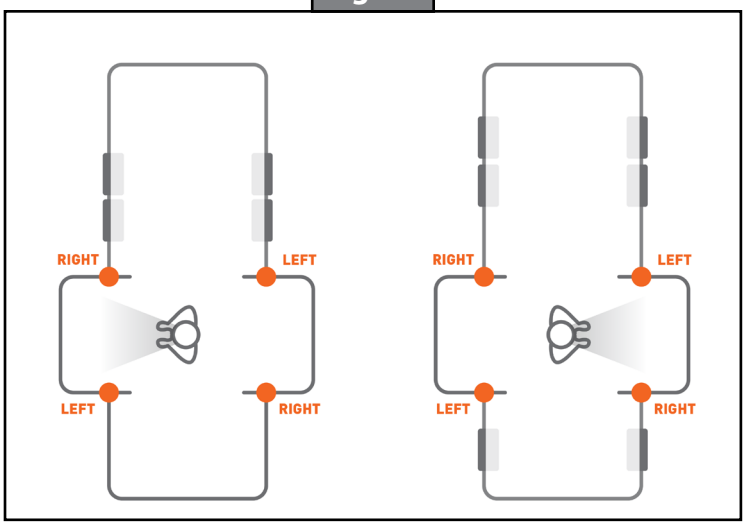

NOTE: Failure to properly connect the motors to the controller will result in problems for future troubleshooting.

6. Route and attach the proper gauge electrical wire from the controller to the 12V DC battery. See 2-Wire Motor Wiring Diagrams.

NOTE: Lippert recommends this circuit be protected with a 30 amp in-line fuse/resettable breaker (not included).

7. Determine location to mount the wall switch. The location must be in view of slide-out and have a minimum depth of 1" inside the wall.
8. Route the wire harness to where the wall switch will be mounted.
   A. Connect the harness to the back of the switch (Fig. 28).
   B. Mount the switch with two screws.

Fig. 28

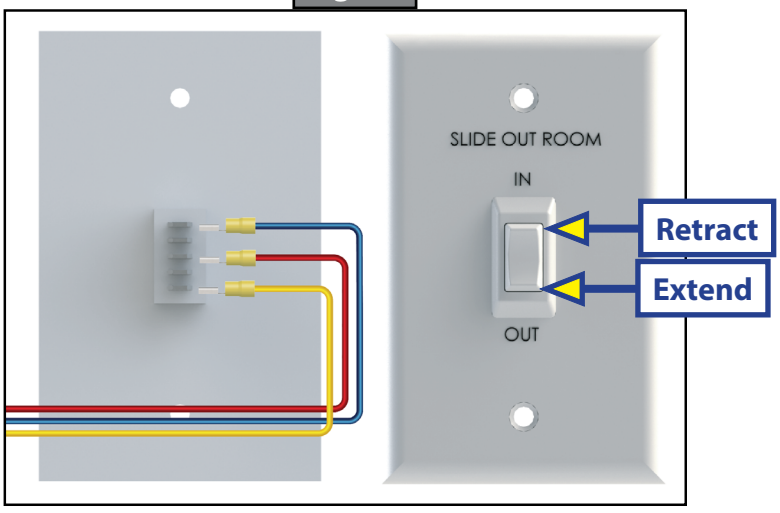

Pre-Operation Check

The controller will identify the affected motor during a fault. Refer to the chart tables in the Troubleshooting section. The controller label also provides some brief information. See Fig. 29. If difficulties continue, prior to replacing the controller verify the system has been wired correctly. Also perform an initial synchronization as described in the Factory Resetting and Initial Synchronization section. See Wiring Diagrams for the controller for proper connection of the motors to the slide-out controller.

Operation

Starting with revision N, the controller was updated to limit the ability for a user to unintentionally put the slide grossly out of sync when continually driving the slide after the slide has automatically stopped because it detected an obstacle. After stopping automatically, the controller will only allow the slide to move in the opposite direction as the next action to help reduce the out-of-sync condition before allowing it to continue in the desired direction of travel.

⚠WARNING

Always make sure that the slide-out room path is clear of people and objects before and during operation of the slide-out room. Always keep away from the gear racks when the slide-out is being operated.

⚠ CAUTION

Moving parts can pinch, crush or cut. Keep clear and use caution.

Prior to Moving the Slide-Out Room The First Time

The SureSlide Slide-Out Controller constantly learns and refines the syncing of both sides. The first time it is run, the slide may skew slightly more than subsequent runs. To ensure the user has a quality first experience, it is recommended the following Initial Synchronization steps be performed:

NOTE: Ensure that a 12-V power supply is used that does not dip below 10 volts at the motor lead from the controller during room operation.

NOTE: Each extend and retract cycle should be uninterrupted for proper synchronization.

1. Retract slide-out until controller shuts motors off.
2. Confirm slide-out is fully retracted and controller does not report any faults.
3. Extend slide-out until controller shuts motors off.
4. Confirm slide-out is fully extended and controller does not report any faults.
5. Retract slide-out until controller shuts motors off.
6. Confirm slide-out is fully retracted and controller does not report any faults.

After this initial synchronization, the slide out is ready for normal operation.

Extending the Slide-Out Room

1. Press and hold the switch in the EXTEND position (Fig. 28). There will be a slight delay before the slide-out room will begin to move. This is normal.

NOTE: Do not push or pull the slide while it is operating. Doing so may trigger a fault. If a fault occurs because the slide was interfered with during operation, extend or retract the slide fully by holding the switch until the slide automatically stops when the slide flange encounters the wall.

2. Release the switch button when the slide-out room is fully extended and stops moving.

NOTE: Once the room has stopped moving, it is not necessary to press the switch a second time.

Retracting the Slide-Out Room

1. Press and hold the switch in the RETRACT position (Fig. 28). There will be a slight delay before the slide-out room will begin to move. This is normal.

NOTE: Do not push or pull the slide while it is operating. Doing so may trigger a fault. If a fault occurs because the slide was interfered with during operation, extend or retract the slide fully by holding the switch until the slide automatically stops when the slide flange encounters the wall.

2. Release the switch button when the slide-out room is fully retracted and stops moving.

NOTE: Once the room has stopped moving, it is not necessary to press the switch a second time.

Intelligent Control Features

Starting with revision N, the controller limits the torque the motor provides at the end of travel. It does this by actively controlling for electrical current overshoot and dynamically setting the electrical current threshold at which the end of travel is detected. This reduces the maximum torque the motor delivers during a stall condition, eliminating unnecessary force on the slide while fully extended or retracted - while providing an optimum torque given the slide dimension or weight at any given time.

Modes

The SureSlide Slide-Out controller has multiple operating modes:

Normal Operating Mode

This is the operating mode which extends and retracts the slide while maintaining synchronization between the two sides. The controller will self-synchronize, detect end-of-travel, detect and store faults and electronically protect the slide-out when certain faults are detected.

Electronic Override Mode

This operating mode will disable fault detection. The slide-out motors will be driven without electronic protections. The slide-outs will not self-synchronize or detect end-of-travel.

NOTE: Use caution in electronic override mode. Fault reporting and electronic protections will be disabled.

NOTE: Driving the flanges of the slide-out into the RV wall could result in damage. Driving a single motor and skewing the slide-out box could result in damage.

1. To enter electronic override mode, press the on-controller mode button seven times (Fig.29) and hold on the last press. The LEDs will rapidly blink one after another while the mode is active.
2. The controller can be returned to normal operating mode by pressing and holding the mode button on the controller for at least one second. The controller will return to normal operating mode on its own after two minutes, even if the slide is being driven.
3. To independently drive either side, unplug one of the opposite side's motor connectors. To move both sides at the same time, ensure both connectors are connected.

Troubleshooting

The SureSlide Slide-Out controller (Fig. 29) detects several faults. LEDs on the controller are used to indicate when the controller is driving a slide-out and faults. The QR code on the controller can be scanned with a mobile phone camera and leads to more troubleshooting documentation.

If the slide stops without an adequate seal, ensure the slide is free of mechanical obstructions. Press the extend/retract switch (Fig. 28) in the opposite direction until both sides of the slide have traveled a few inches. Then hold the switch in the desired direction again until both sides are sealed. If the issue reoccurs after operating the slide normally, perform a factory reset and initial synchronization.

NOTE: When in electronic override mode, electronic protections will be disabled.

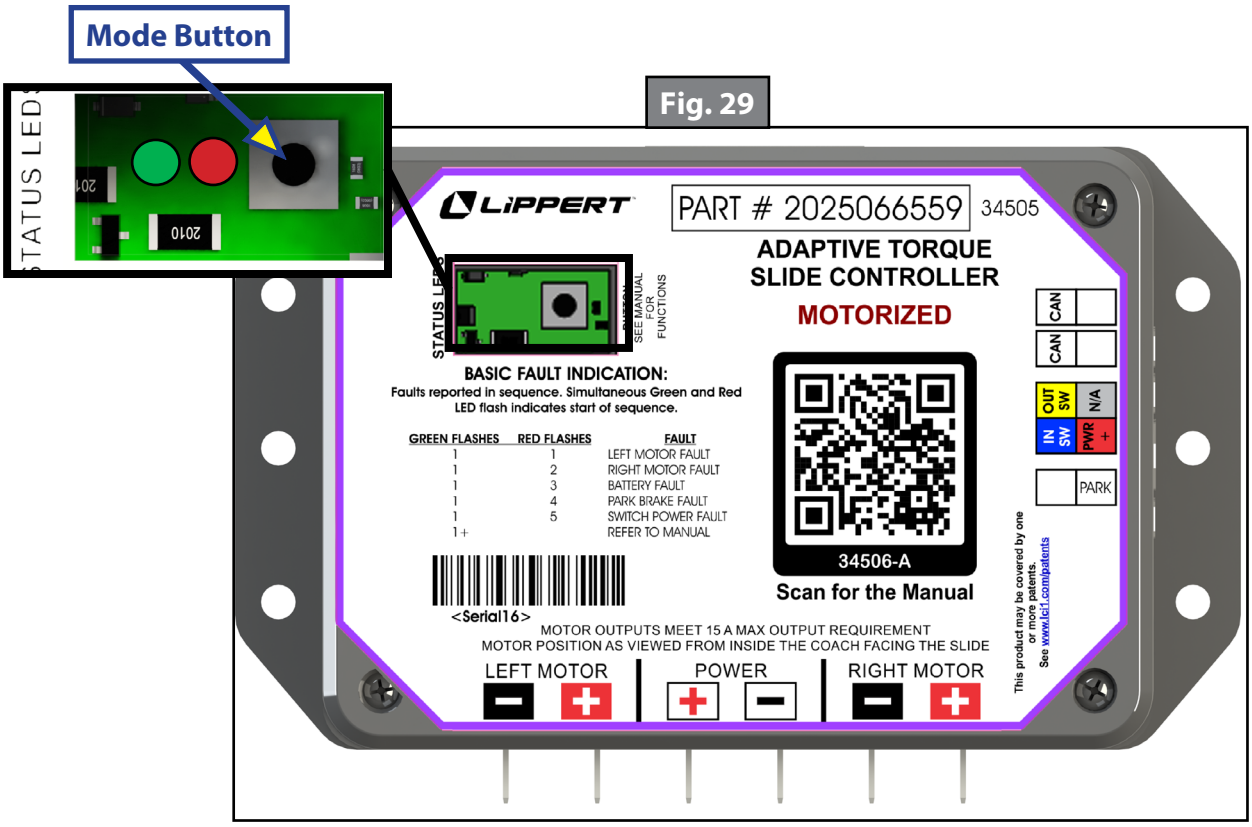

Fig. 29

Mode Button Functions

The mode button (Fig. 29) is used to perform a factory reset of the controller and to switch between operating modes.

To use the mode button, press it the number of times needed to get to the desired function and hold on the last press for 1 second. With each press, the green and red LEDs will both illuminate. When pressed and held, the LEDs will remain illuminated for 1 second, then turn off. Consecutive presses must be made within 1 second.

Examples:

1. Press 6 times and hold down on the 7th press – Enters electronic override mode.
2. Press and hold once (when in electronic override mode) – returns to normal operating mode.
3. Press 4 times and hold down on the 5th press – Performs factory reset.

Switching Between Operating Modes

It is possible to switch between operating modes using the mode button. The controller will return to normal operating mode on its own after 2 minutes, even if being driven.

NOTE: When in electronic override mode, electronic protections will be disabled.

Operating Modes		
Presses	Function	Description
7 – (press 6 times, hold on the 7th)	Enter Electronic Override Mode	Enter Electronic Override Mode
1 – hold on first press	Return to normal operating mode	Returns the controller to normal operating mode

Factory Reset and Initial Synchronization

After maintenance and during troubleshooting, a factory reset may need to be performed. See Performing a Factory Reset section. After performing a factory reset, perform an initial synchronization to ensure the sides of the slide-out are properly aligned.

When to Perform a Factory Reset

- After swapping motors.
- After reversing a motor's polarity to correct slide travel direction.
- After repairing faulty motor harnesses.
- After swapping controllers to operate different slides – even known good motors. Each slide is unique.
- During the initial installation of a controller on a slide fresh from factory.

Performing a Factory Reset

A factory reset will clear current synchronization. To perform a factory reset, press the mode button 5 times and hold on the 5th press for at least 1 second.

NOTE: After performing a factory reset, users will need to follow the steps under the initial synchronization instructions. Otherwise, the slide will not synchronize properly and may be misaligned or jackknife.

Performing an Initial Synchronization

NOTE: Each extend and retract cycle should be uninterrupted for proper synchronization.

1. Retract slide-out until controller shuts motors off.
2. Confirm slide-out is fully retracted and controller does not report any faults.
3. Extend slide-out until controller shuts motors off.
4. Confirm slide-out is fully extended and controller does not report any faults.
5. Retract slide-out until controller shuts motors off.
6. Confirm slide-out is fully retracted and controller does not report any faults.

LED Indications

- When the motors are running, the green LED (Fig. 30A) and red LED (Fig. 30B) will blink synchronously.

- When indicating faults, the LEDs blink sequentially, report all faults and repeat. The green LED will blink once or twice to indicate the reporting mode, followed by one or more blinks of the red LED to indicate each fault.

Examples

A right motor fault:
The green LED will blink once, then the red LED will blink twice. Next, both lights will blink at the same time to indicate the end of the sequence and the pattern will repeat.

A left motor fault and a right motor fault:
The green LED will blink once, the red LED will blink once, then the green LED will blink once and the red LED will blink twice. Next, both lights will blink at the same time to indicate the end of the sequence and the pattern will repeat.

Modes

- When switching between modes, both LEDs will blink to acknowledge the user selection.

  After pressing the mode button 5 times to initiate a factory reset, there will be 5 blinks.
- When in electronic override mode, the LEDs will rapidly blink one after another while the mode is active. Active fault warnings and other electronic protections will be disabled.

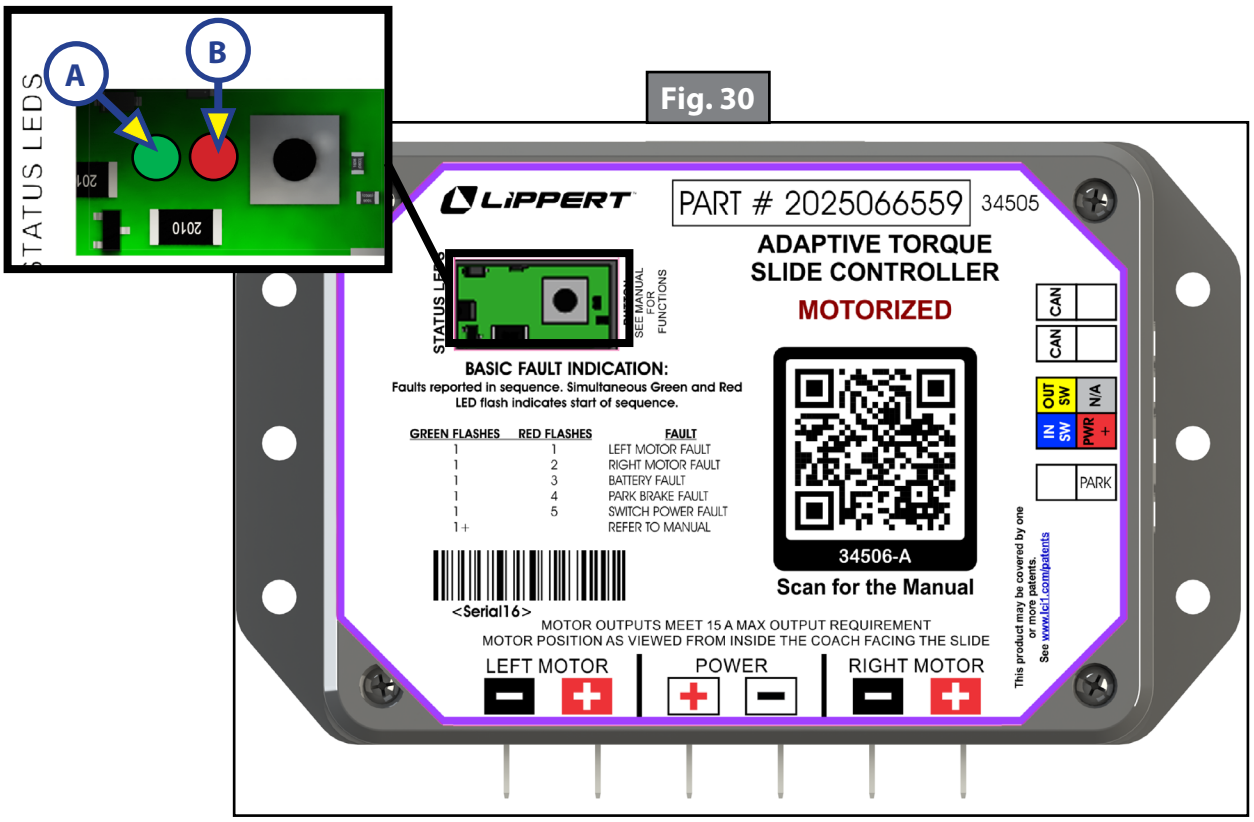

Fig. 30

Basic Fault Reporting Mode Table				
Green LED	Red LED	DTC: Diagnostic Trouble Code	Description	Troubleshooting Steps
1 (Basic fault)	1	Left Motor fault	There is a problem with the left motor circuit.	Check connections on the motor, the controller and check the wire harness for damage. Motor may need to be replaced.
1 (Basic fault)	2	Right Motor fault	There is a problem with the right motor circuit.	Check connections on the motor, the controller and check the wire harness for damage. Motor may need to be replaced.
1 (Basic fault)	3	Battery fault	There is a problem with the detected battery power.	Ensure the battery is fully charged and try actuating again.
1 (Basic fault)	4	Parking brake fault	There is a problem with the parking brake signal.	Check to ensure the parking brake is engaged.
1 (Basic fault)	5	Switch power fault	There is a problem with the switch circuit.	Check connections on the switch, the controller and check the wire harness for damage. Switch may need to be replaced.

5-Wire Motor Electrical Controller Installation

1. The controller is not waterproof. Mount the controller in a clean, dry and weathertight location that will keep it from being damaged but is easily accessible for service. Use #8x1" wood screws or equivalent.
   A. **Controllers may NOT be mounted in an LP tank storage area.**
   B. The controller (Fig. 31) must be mounted with the face visible, allowing the indicator lights and mode button to be accessible for resetting and troubleshooting purposes.
   C. OEM-supplied wire and circuit protection to be 10 AWG wire with 30 amp circuit protection installed in-line between the power supply and controller. All wiring to conform to RVIA standards.

Fig. 31

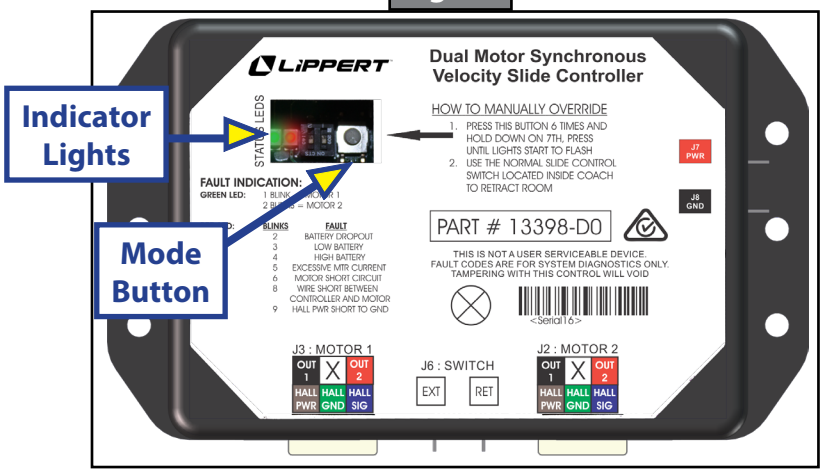

Startup and Final Inspection

2. Inspect both the interior fascia and the exterior T-molding and verify they are securely fastened.
3. Inspect the connections at the controller and verify they are securely attached.
4. Visually inspect all of the gear rack mounting screws to verify they are tight and flush against the gear racks.
5. To synchronize the slide motors:
   A. Using the wall switch, press the “IN” button.
   B. Verify that both motors are moving the room in the same direction. If not, stop and check the wiring and connections to verify proper operation. Replace any damaged harness or motor if the wiring is damaged.
   C. Allow the room to power all of the way in and continue pressing the “IN” button until both sides have completely stopped and the motors turn off by themselves.
   D. Extend the room 1".
   E. Retract the room until the motors amp out.
   F. Repeat steps D and E. In many cases two or three repetitions are necessary to synchronize the system. When the motors are synchronized they will shut down (amp out) at the same time.
6. Using the wall switch, extend the room all of the way out until it stops. Conduct these inspections:
   G. Verify the room did a full stroke and that the interior seals are evenly compressed.
   H. Verify the vertical wipe seals are in uniform contact with the side walls of the slide room.
   I. Verify the upper and lower wipe seals are in uniform contact with the floor and ceiling.
   J. Verify that all of the floor rollers are in constant contact with the slide box floor.
   K. Verify the lower wipe seal is of proper length and is clear of all of the rollers.
   L. Verify the exterior top wipe seal is overlapped and glued at each corner to the vertical wipe seal.

System Maintenance

It is recommended that when operating SureSlide® Slide-out system in harsh environments (road salt, ice buildup, etc.) that the gear racks and seals be kept clean and free of debris. They can be washed with mild soap and water.

NOTE: No grease or lubrication is necessary, and in some situations may be detrimental to the long-term dependability of the system.

2-Wire Motor Wiring Diagram - Towable

NOTE: Refer to Wire Guidance for proper wire size based on length.

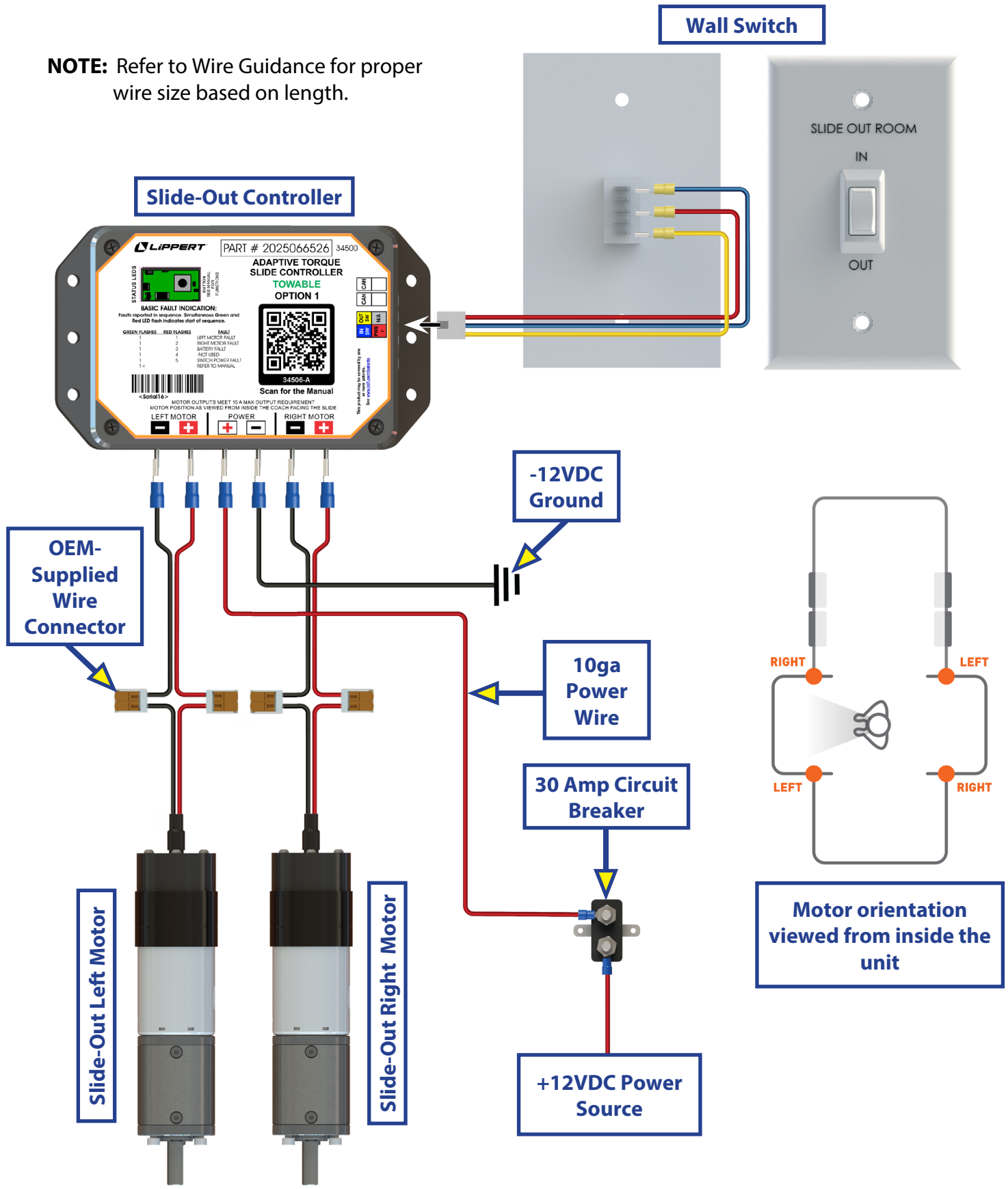

2-Wire Motor Wiring Diagram - Motorized

NOTE: Refer to Wire Guidance for proper wire size based on length.

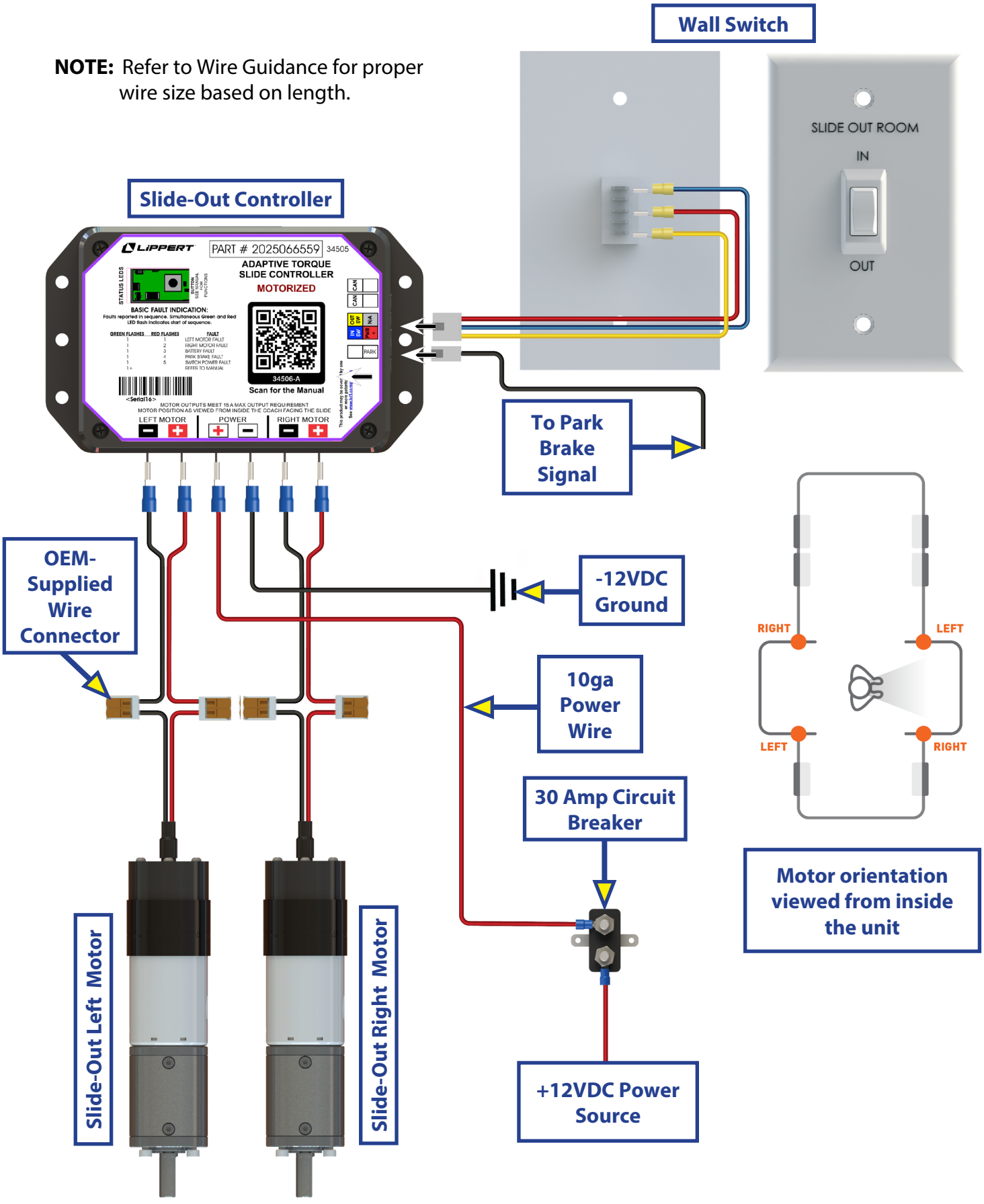

5-Wire Motor Wiring Diagram

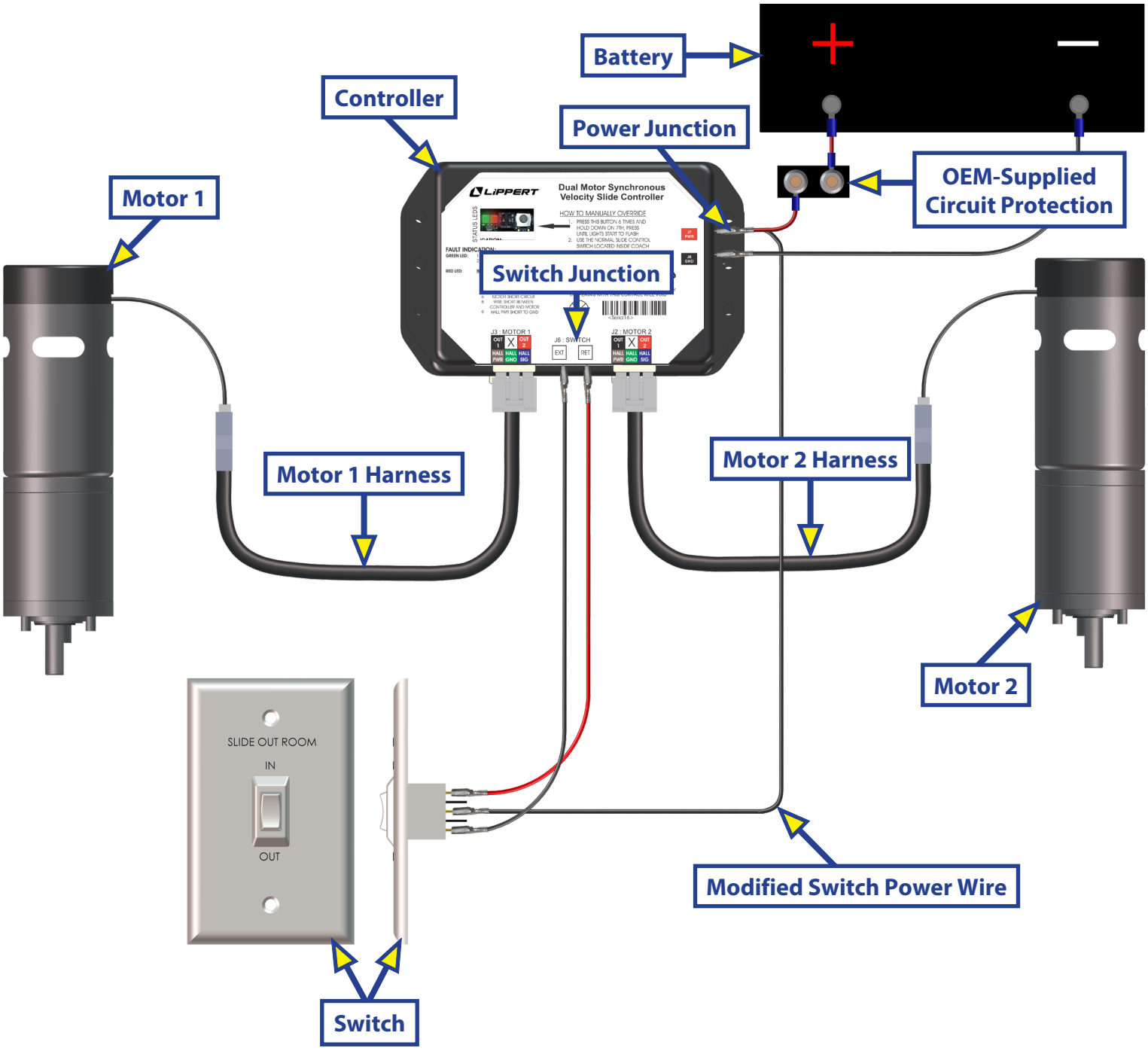

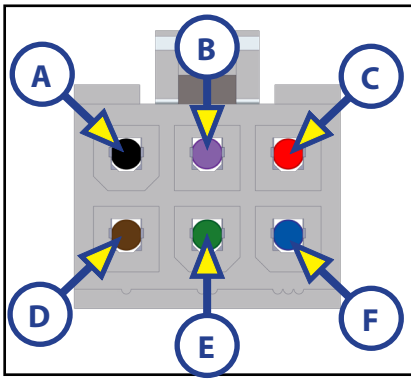

Wiring Color Code Information

A. Black - Power/Ground
B. Purple - Not Used
C. Red - Power/Ground
D. Brown - Hall Effect Power
E. Green - Hall Effect Ground
F. Blue - Hall Effect Communications

The contents of this manual are proprietary and copyright protected by Lippert. Lippert prohibits the copying or dissemination of portions of this manual unless prior written consent from an authorized Lippert representative has been provided. Any unauthorized use shall void any applicable warranty. The information contained in this manual is subject to change without notice and at the sole discretion of Lippert. Revised editions are available for free download from lippert.com.

Please recycle all obsolete materials.

For all concerns or questions, please contact Lippert
Ph: 432-LIPPERT (432-547-7378) | Web: lippert.com | Email: customerservice@lci1.com