TURNING POINT® PIN BOX

(AFTER OCTOBER 2021)

OWNER'S MANUAL

Scan for product support

TABLE OF CONTENTS

Introduction 2
Safety 2
Preparation 3
Tow Rating Weights Check For 16,000 lbs. Pin Box 3
Cab and Bed Clearance Check 3
Operation 4
Conventional Transport 4
Moving Pivot Point 5
Wedge Guide 6
Hitching Procedure 10
Pull Test 11
Maintenance 12
Notes 13

Introduction

The Turning Point® Pin Box is designated for 5th wheel application only. The Turning Point Pin Box can be used as a standard pin box for conventional transport or, with the pivot point relocated to the trailer, will provide up to a 90-degree turn and towing capability.

Additional information about this product can be obtained from lippert.com/support or by downloading the free LippertNOW app. The app is available on Apple App Store® for iPhone® and iPad® and also on Google Play™ for Android™ users. Apple App Store®, iPhone®, and iPad® are registered trademarks of Apple Inc. Google Play™ and Android™ are trademarks of Google Inc.

NOTE: Please refer to hitch manufacturer's instructions as to the compatibility with the Lippert Turning Point Pin Box. Not all hitches are designed to accept a wedge that relocates the pivot point.

NOTE: Images used in this document are for reference only when assembling, installing and/or operation this product. Actual appearance of provided and/or purchased parts and assemblies may differ.

Safety

Read and understand all instructions before installing or operating this product. Adhere to all safety labels. This manual provides general instructions. Many variables can change the circumstances of the instructions, i.e., the degree of difficulty, operation and ability of the individual performing the instructions. This manual cannot begin to plot out instructions for every possibility, but provides the general instructions, as necessary, for effectively interfacing with the device, product or system. Failure to correctly follow the provided instructions may result in death, serious personal injury, severe product and/or property damage.

⚠WARNING

The "WARNING" symbol above is a sign that an installation procedure has a safety risk involved and may cause death or serious injury if not performed safely and within the parameters set forth in this manual.

⚠WARNING

The trailer MUST be supported per manufacturer's specifications before working underneath. Failure to do so may result in death or serious injury.

⚠CAUTION

Moving parts can pinch, crush or cut. Keep clear and use caution.

Preparation

⚠WARNING

Failure to check and follow tow ratings could result in tow vehicle damage or truck and trailer separation while towing. Trailer and its contents must not exceed truck, hitch and/or trailer tow ratings.

Tow Rating Weights Check For 16,000 lbs. Pin Box

1. Do not exceed:
   - **A.** Vehicle tow rating
   - **B.** Turning Point Pin Box rating of 16,000 lbs.
   - **C.** Gross trailer weight (trailer + full water tanks + cargo)
   - **D.** Pin weight of 3,200 lbs. (20 percent maximum of Step 1C)
2. Trailer weight should be lowest of the tow rating weights to ensure safe towing.

NOTE: The Turning Point Pin Box's pin weight is designed for a maximum load of 20 percent of the gross trailer weight of 3,200 lbs.

Fig. 1

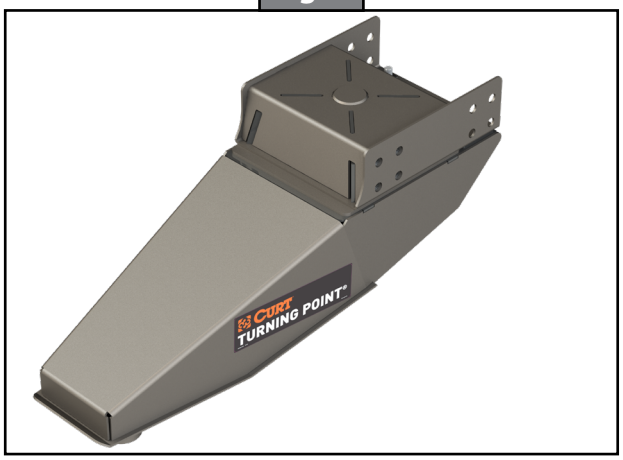

Cab and Bed Clearance Check

1. Measure the distance from the hitch jaws on the tow vehicle to the cab.
   - **A.** Record measurement and vehicle make/model here: _____
   - **B.** Add 22" (the length of the Turning Point Pin Box) to recorded measurement in Step 1A.
   - **C.** Record result here: _____
2. Measure the trailer width.
   - **A.** Record measurement here: _____
   - **B.** Divide measurement in Step 2A by 2.
   - **C.** Record result here: _____
3. Determine towing configuration.
   - **A.** If the Step 1C result is 4" greater than the Step 2C result, then the Turning Point Pin Box can be used in both configurations.
   - **B.** If the Step 1C result is less than 4" greater than the Step 2C result, then the Turning Point Pin Box can only be used in the standard configuration for conventional towing. The 90-degree turn and tow capability will not be available.

Operation

Conventional Transport

The Turning Point Pin Box can be used as standard pin box. Two ⅝" - 11 x 2" lockout bolts (Fig. 2A) installed on the back of the pin box prevent rotation and permit use of the pin box without the wedge installed.

When using the Turning Point pin box as a standard pin box, the two ⅝" lockout bolts shall be torqued to 200 ft-lbs.

NOTE: The two lockout bolts are identical to the ⅝" - 11 x 2" bolt used to secure the wedge and the bolts can be used interchangeably. Two bolts are required to secure the wedge block when moving the pivot point to permit a 90-degree turn.

Fig. 2

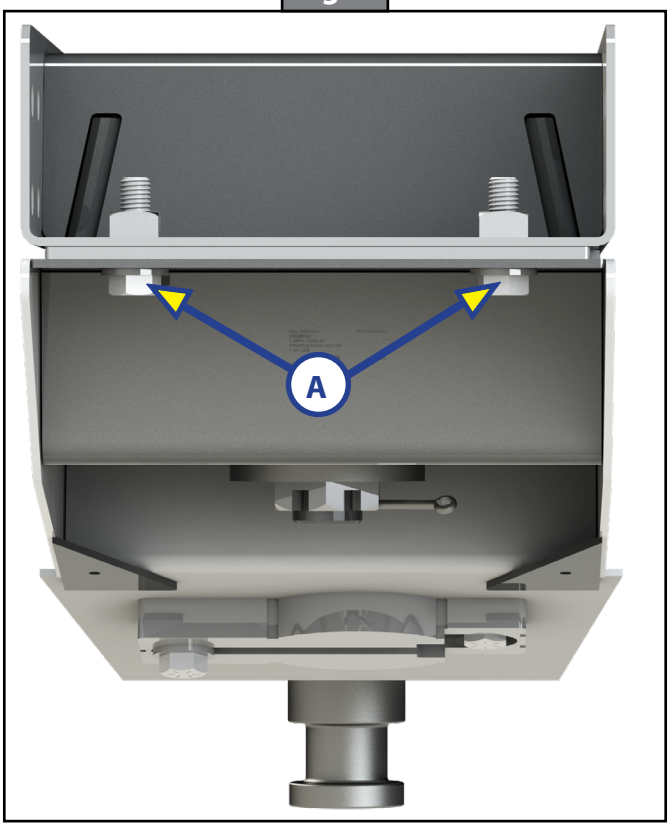

Moving Pivot Point

To provide towing with up to a 90-degree turn, the pivot point must be moved. Installation of a wedge block will lock the pin box at the tow vehicle's hitch and move the pivot point from the vehicle's bed to the nose of the 5th wheel (Fig. 3A).

NOTE: Not all tow vehicle and trailer combinations will allow a 90-degree turn.

⚠WARNING

It is normal for a gap to open up at the rear of the pin box. The gap appears when the pin box is loaded on a hitch and it normally remains after it is unloaded. However, the gap should be no wider than ½" to ensure a safe operation. Utilizing the pin box with a larger gap can result in vehicle instability, vehicle damage, serious injury and death.

NOTE: Please refer to hitch manufacturer's instructions regarding the compatibility with the Lippert Turning Point Pin Box. Not all hitches are designed to accept a wedge block that relocates the pivot point.

Fig. 3

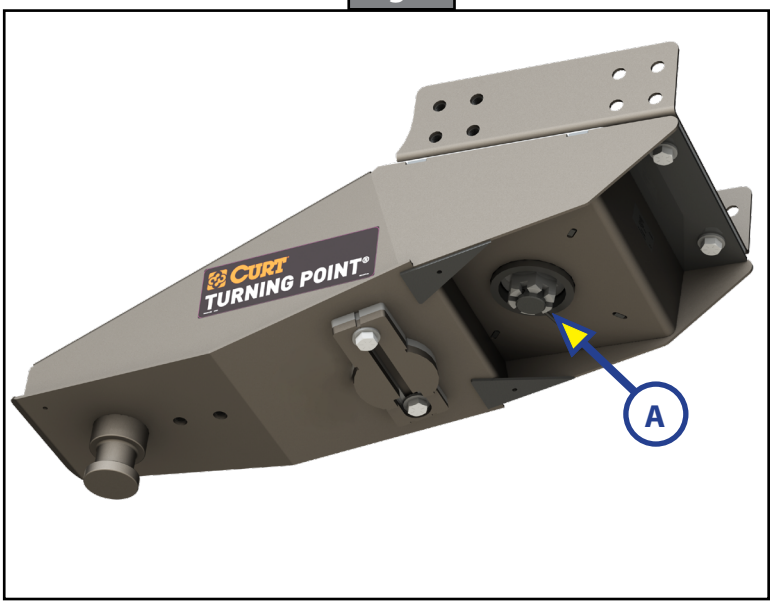

⚠WARNING

Failure to consult with hitch manufacturer to verify compatibility may result in death, serious personal injury or severe product and/or property damage.

NOTE: Hitches listed below in the Wedge Glossary table may require a different wedge block. Please consult with hitch manufacturer to verify compatibility.

Wedge Glossary	
Wedge Model Reference	Most Common Hitch Description
Reese 30850	Reese Pro Series 15K, 16K
Reese 30861	Curt 16K
Reese 30865	Reese Titan
Reese 31016	Curt A16
Reese SWW-01	Reese Elite Series
Reese SWW-03	Select Series
Reese SWW-04	Husky
Reese SWW-05	Hi-Jacker
SWW-06	B&W
SWW-07	RBW
SWW-08	Colibert
SWW-09	PullRite

Wedge Guide

This guide displays wedges for specific 5th Wheel hitches. These wedges may offer the best fit for the hitch design, although the standard wedge block included with the Turning Point Pin Box may also be successfully used in many applications. Some of the Reese wedges are featured on the Reeseprod.com website which also provides information on dealer locations where the wedges may be purchased. Some of the wedges are also available for purchase at amazon.com.

Reese PN SWW-04
Husky

Reese PN SWW-05
Hi-Jacker

Reese PN 30850
Pro Series

Reese PN SWW-06
B&W

Reese PN 30865
Titan Series

Reese PN SWW-03
Select Series

Reese PN SWW-01
Elite Series

Reese PN SWW-09
PullRite
(Not Superglide)

Reese PN SWW-08
Colibert

Reese PN 31016
Curt A16

⚠WARNING

Remove rear lockout bolts when hitch wedge is to be installed. When removing hitch wedge, re-install rear lockout bolts to original location. Failure to install bolts correctly according to instructions can result in vehicle instability, vehicle damage, serious injury and death.

1. Remove the two 5/8" - 11 x 2" lockout bolts and mounting hardware from the rear of the pin box (Fig. 2A).
2. Remove the standard wedge block from its storage location (Figs. 4A and 5A) by removing the bolt(s) and lock washer(s).

NOTE: For Turning Point Pin Boxes manufactured before August 2022: The wedge for the CURT Turning Point Pin Box may be stored in two different locations.

A. The original storage location (Fig. 4A) utilized two bolts to secure the wedge. For the pin box shipped with the two-bolt storage option, owners are directed to move the wedge to the preferred storage location (Fig. 5A) because of the potential for interference with some 5th wheel hitches. Retain the extra bolt as a spare but do not use two bolts to store the wedge.

B. The current preferred one-bolt wedge storage option (Fig. 5A) is designed to prevent hitch interference. In this orientation, the wedge should be pushed to the farthest back location with the recessed slot facing downward, away from the pin box (Fig. 5).

NOTE: The bolt(s) holding the wedge in place is identical to the 5/8" - 11 x 2" lockout bolts and the bolts can be used interchangeably. Two bolts are required to secure the wedge block when the pivot point is moved to provide towing with up to a 90-degree turn.

NOTE: The standard wedge block is supplied with the pin box and is compatible with many different 5th wheel hitches.

Fig. 4

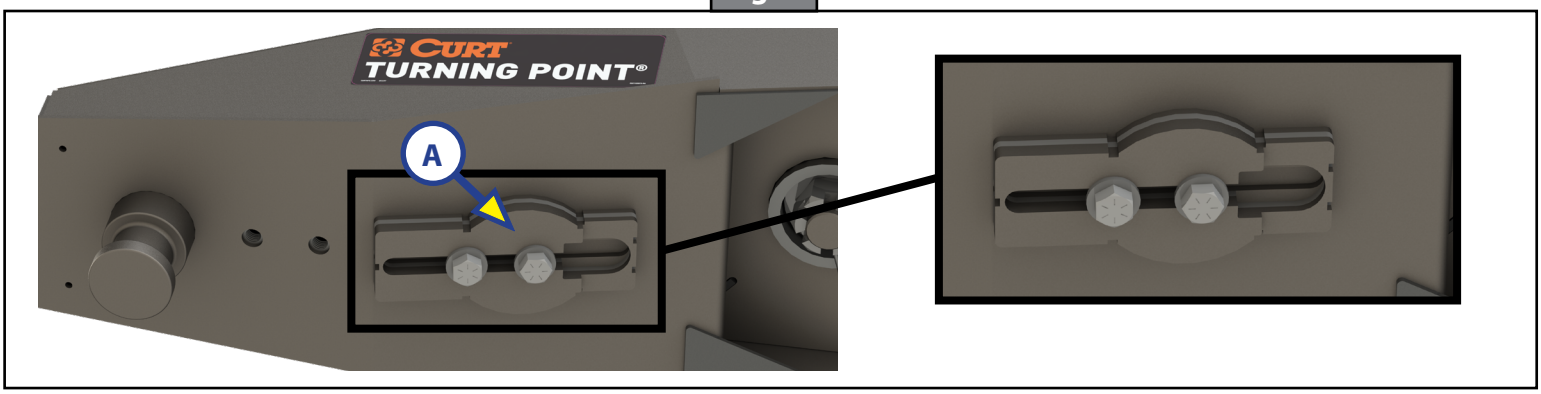

Fig. 5

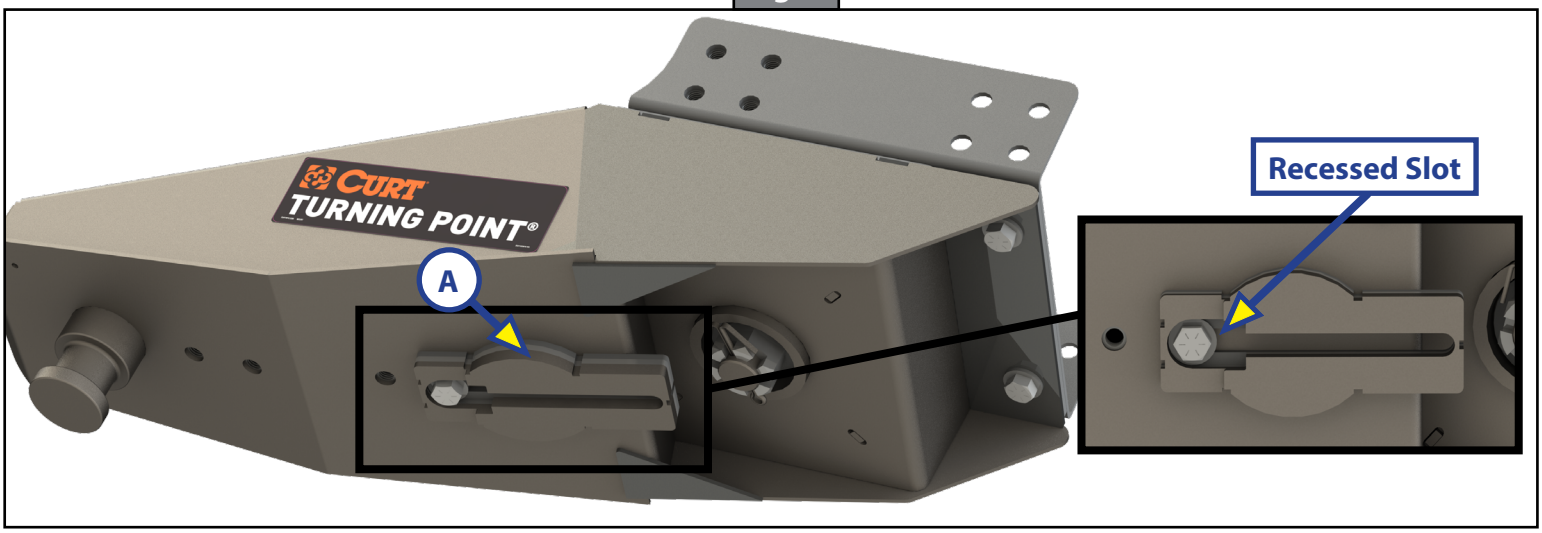

NOTE: For Turning Point Pin Boxes manufactured after August 2022: For the wedge storage position, the wedge will be rotated 90 degrees and a second storage bolt will be added (Fig. 6A).

Fig. 6

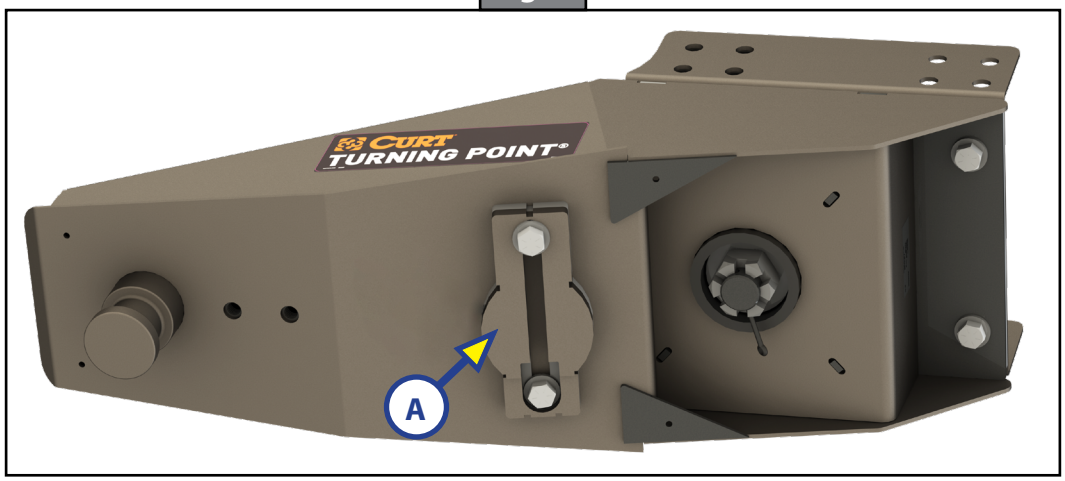

3. Determine the best orientation for installation of the wedge (Fig. 7 and Fig. 8).

- **A.** Dry fit the wedge into the hitch funnel (Fig. 9 and Fig. 10) to make sure of the proper orientation.
- **B.** The wedge should have contact with all parts of the funnel while providing adequate space for the kingpin receiver.
- **C.** Different hitch configurations may require a different orientation for the wedge.

Wedge orientation for Reese/Draw-Tite/ Hidden Hitch Select Series, Pro Series, Husky and similar 5th wheel hitch styles.

Fig. 7

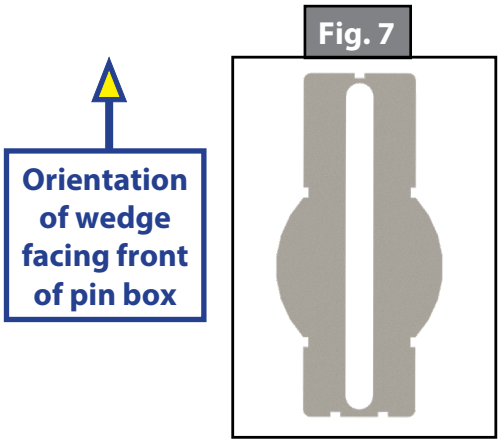

Fig. 9

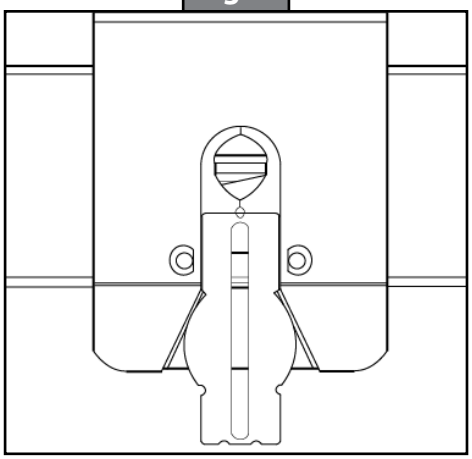

Wedge orientation for Reese/Draw-Tite/Hidden Hitch Signature Series, Elite Series and Select Plus, Reese Titan 16K and 20K, compatible B&W and similar 5th wheel hitch styles.

Fig. 8

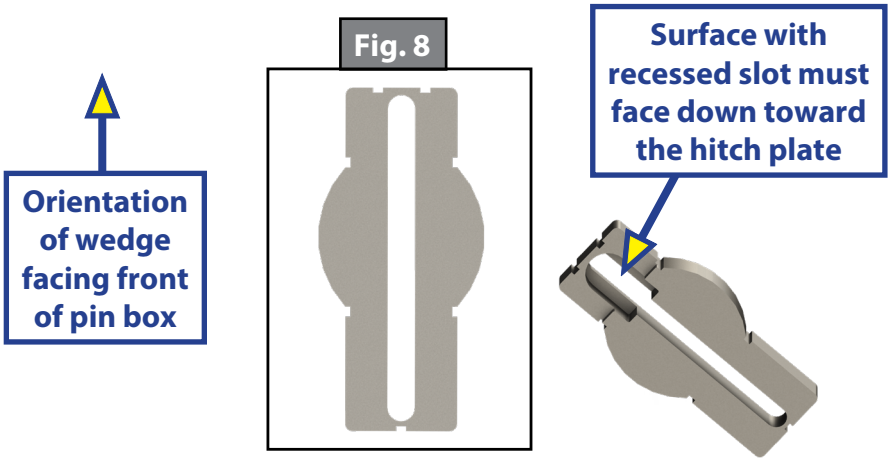

Fig. 10

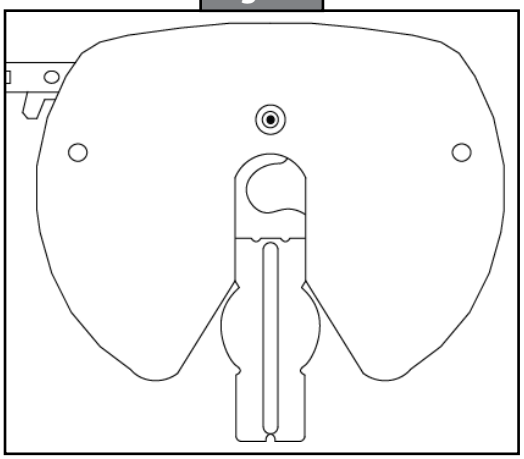

4. After best wedge orientation has been determined, place the wedge into position on the pin box (Fig. 11A).
   A. Install two 5/8" - 11 x 2" bolts and lock washers.
   B. Tighten the bolts until the lock washers begin to engage.

Fig. 11

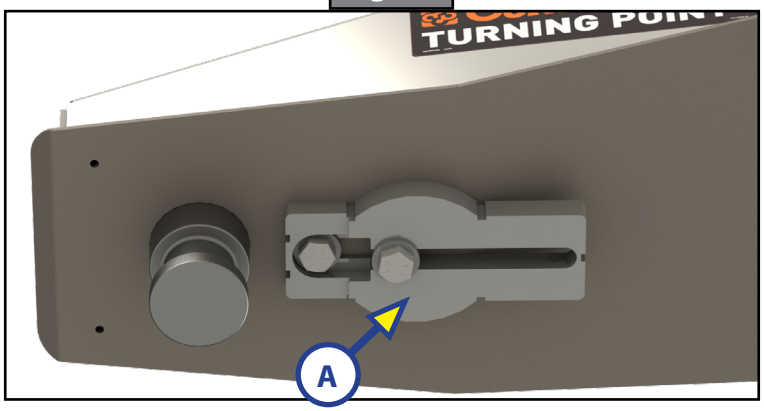

   I. Do not fully tighten the bolts.
   II. The wedge should be allowed to slide by tapping it with a hammer or mallet.

5. Go to the Hitching Procedure section and follow the instructions to connect the trailer's pin box to the tow vehicle's hitch.

NOTE: To assist with hitching, grease may be applied to the wedge, around the kingpin and on the skid plate surface.

NOTE: For proper latching of the 5th wheel hitch, refer to the hitch owner's manual.

6. Raise the trailer landing gear and drive the truck and trailer forward a few feet so the truck and trailer are in a straight line.
7. Put the vehicle in park and apply the emergency brake.
8. Block the trailer wheels and lower the trailer landing gear so the landing gear is resting firmly on the ground and supporting the trailer's weight.
9. Tap the wedge firmly forward until it will no longer move.
10. Tighten both wedge bolts.

NOTE: Both bolts may not be accessible while the unit is hitched. In this case, tighten the most accessible bolt (usually the rear bolt). The bolts will later be tightened to the proper torque value.

11. Unhitch the trailer from the tow vehicle following the manufacturer's instructions.
12. Torque the two 5/8" - 11 x 2" wedge bolts to 200 ft-lbs.

NOTE: A thin-walled socket may be necessary to torque the bolts.

The wedge should be adjusted or checked for proper adjustment before each trip. If a different 5th wheel hitch is used after the adjustment, it is necessary to readjust the wedge for the new 5th wheel hitch.

Hitching Procedure

⚠WARNING

Failure to follow these instructions may result in death or serious injury.

1. Place blocks firmly against the front and rear of each trailer wheel to prevent possible movement either forward or backward.
2. If necessary, lower the tow vehicle's tailgate.

NOTE: Clearance of the lowered tailgate to the trailer needs to be monitored during hookups, since some combinations of truck and trailer have little or no clearance.

3. Using the trailer landing gear, adjust trailer height per the manufacturer's recommendation so the bottom of the trailer's pin box is ½" to 1" below the hitch skid plate (Fig. 12).

Fig. 12

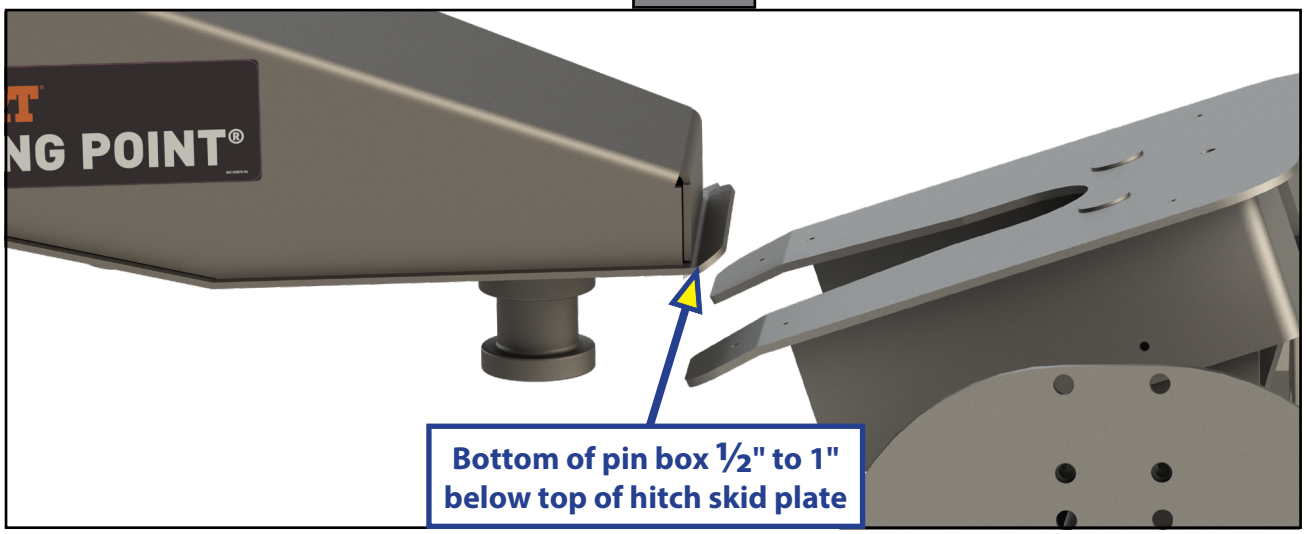

⚠WARNING

Failure to follow these instructions may result in the kingpin being too high and coming to rest on top of closed jaws or not completely inside the jaw. This could result in the trailer separating from the hitch which may result in death or serious injury.

⚠WARNING

Do not attempt to hitch the trailer by using trailer jacks to lower the trailer and kingpin. This could result in the kingpin coming to rest on top of the skid plate instead of within the hitch opening, which may result in death or serious injury.

NOTE: During the hitching maneuver, the bottom of the trailer's pin box should come into contact with the hitch skid plate ramp.

4. Open the jaw on the 5th wheel head. Refer to the manufacturer's instructions for proper 5th wheel hitch latch operation.
5. Back the truck slowly toward the trailer until the truck's hitch contacts the bottom of the pin box and the kingpin slides into the receiver.

NOTE: The truck and trailer must be straight and in line for the wedge to enter into the 5th wheel funnel.

6. Latch 5th wheel hitch in closed position per the instructions of the 5th wheel hitch manufacturer.
7. With the trailer wheels still blocked, make sure:
   - The landing gear is resting on firm, level ground.
   - The landing gear fully supports the trailer's weight.
   - The truck is stationary and in park with the emergency brake on.
   - The bottom of the pin box is resting on top of the hitch.
   - There is no space between the mating surfaces.

NOTE: If space exists between the pin box and hitch, the trailer has not been properly hitched. Do not tow the trailer. Instead, repeat the hitching steps 1-7 until the trailer is properly hitched.

⚠WARNING

Working between the tow vehicle and trailer can be dangerous. Failure to properly secure the tow vehicle and trailer from movement can result in serious personal injury or death and serious product damage. Make sure tow vehicle and trailer are secured from movement. Make sure all safety precautions are followed to prevent personal injury or product damage.

8. Connect the electrical cable between the truck and trailer.
9. Connect the breakaway switch cable from the pin box to a permanent part of the truck with slack to allow for rotation of pin box.
10. Raise the tailgate of the truck.
11. Do not tow the trailer until a Pull Test has been conducted.

Pull Test

⚠WARNING

Failure to perform a pull test may result in severe property damage, serious personal injury or death. Failure to secure tow vehicle and trailer from movement during procedure could result in severe property damage, serious personal injury or death. Make sure tow vehicle and trailer are properly secured against movement during the procedure.

1. Make sure the trailer wheels are blocked, the trailer landing gear is resting on firm ground to support the trailer and the tow vehicle is in park with the emergency brake engaged.
2. Return to the cab of the tow vehicle, release the emergency brake and then apply the trailer brakes.
3. Slowly pull the trailer forward with the tow vehicle.
   - **A.** If the tow vehicle is properly hitched, the wheel blocks and trailer brakes should keep the truck from moving forward.
   - **B.** If the trailer is not properly hitched, the trailer will separate from the hitch and the truck will move forward while leaving the trailer behind. If this happens, repeat the Hitching Procedure.
4. After successfully performing the Pull Test, fully raise the landing gear per manufacturer's recommendations.
5. Check and inspect all electrical circuits for proper operation, including clearance lights, turn signals and stop lights.
6. Remove and store all trailer wheel blocks.

Maintenance

1. Check all fasteners every 500 miles to ensure connections have not loosened.
2. Periodically check the torque values of all bolts, including 200 ft-lbs for wedge/pivot lock and 175 ft-lbs for mounting bolts located between the trailer wings and the pin box.
3. Tighten loose fasteners to previously stated torque requirements.
4. Check bearing and grease once per season. If more grease is needed, add it to the bearing assembly. Use any of the recommended brands below.

Approved Sources - Bearing Grease	
Mobile Oil	Mobilgrease HP
Exxon/Standard	Ronex MP
Kendall Refining Co.	Kendall L-427
Ashland Oil Co.	Valvoline Val-plex EP Grease
Pennzoil Prod. Co.	Premium Wheel Bearing Grease 707L

⚠WARNING

Do not mix lithium, calcium, sodium or barium complex greases. Mixing of these incompatible compounds can create a corrosive and/or toxic chemical with fumes that can result in a serious health risk if exposed to skin or lungs. When converting from one grease to another, make sure all old grease is removed completely prior to applying new grease.

5. If the nut needs to be removed when checking the bearing, leave in the rear locking bolts to maintain engagement.
6. Re-torque the nut to 50 ft-lbs when replacing the nut and make sure to install a new cotter pin.
7. To mitigate squeaking, turn the pin box to 45 degrees and grease the plastic sections that are visible. Utilize the same grease used to lubricate the hitch plate/pin.

Notes

The contents of this manual are proprietary and copyright protected by Lippert. Lippert prohibits the copying or dissemination of portions of this manual unless prior written consent from an authorized Lippert representative has been provided. Any unauthorized use shall void any applicable warranty. The information contained in this manual is subject to change without notice and at the sole discretion of Lippert. Revised editions are available for free download from lippert.com.

Please recycle all obsolete materials.

For all concerns or questions, please contact Lippert
Ph: 432-LIPPERT (432-547-7378) | Web: lippert.com | Email: customerservice@lci1.com