CCD-0011573 - REV: 8.24.2026

PART I: WELCOME to the Kwikee Products Service Training.

It is our sincere hope that the information you gain from this training will enhance your confidence in and familiarity with the products we manufacture. The information will give you overviews of the products and some details on installation, maintenance, and repair.

From time to time, changes occur in procedures, specifications, and even the products themselves. As with any product information, keeping the lastest information at your disposal is an ongoing and intregal part of providing you with a quality product. Every product we ship includes the most current documentation and RV manufacturers provide binders or files for owners to store Kwikee and other product documentation in the RV. But we know that doesn't always happen. We know, too, that RVs get serviced, parts get changed, and changes aren't reflected or noted in the original documentation. If, however, there is documentation, we encourage you to look it over before servicing the equipment, even if you are fairly familiar with the product.

KEEPING SERVICE INFORMATION CURRENT

You may want to regularly check our website ***(www.lci1.com)*** and look at the downloadable documentation section. Here you will find the most recent versions of all of our documentation. You can view these documents online or print them out to keep your binder up-to-date.

We are also available to help you by phone:

Kwikee Customer Service Department
(574) 537-8900

Weekdays 7:00 am to 4:00 pm (PST)

KWIKTIP

On the front page of every Kwikee document is a literature number and the date the document was development or revised. You can make sure you are looking at the most recent documentation by comparing your document with the documents at ***www.lci1.com.***

3/04 Kwikee Products
#1422259

CCD-0011573 - REV: 8.24.2026

Table of Contents

TOPIC	BINDER PAGE #
Welcome	1
Contents	3
Steps Overview	4
Step Improvements	7
Replacement Part # by Step Series	11
#214 IMGL and 9510 Control Replacement Kits	27
Steps Owners Manuals (888, 880, 842)	31
KwikTest	71
KwikLube	73
Cam Stop Adjustment	74
Manual Retraction	75
Door Switches	76
Cargo Slides	77

CCD-0011573 - REV: 8.24.2026

Steps

Currently Kwikee makes 19 different styles of electric steps; 10 with single treads; 5 with double treads; and 4 with triple treads. Each style is identified by a 'Series' number.

Single Tread Step Series

Series 26

Rise: 5" Run: 8.5"
Bolt pattern: 7.5" x 20.5"

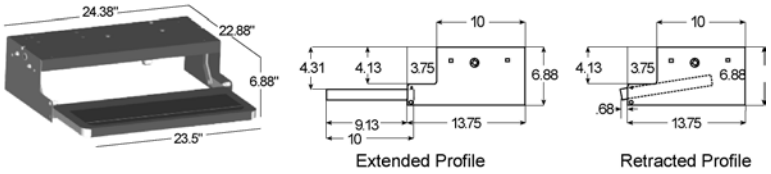

Series 28

Rise: 7" Run: 10"
Bolt pattern: 6.5" x 22"

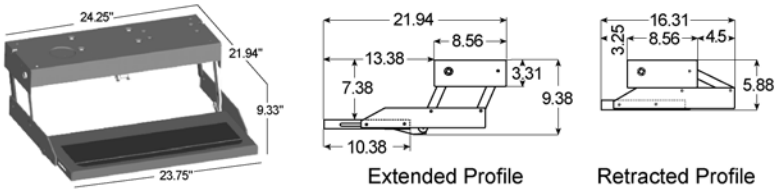

Series 30

Rise: 7.5" Run: 16.75"
Bolt pattern: 6" x 31"

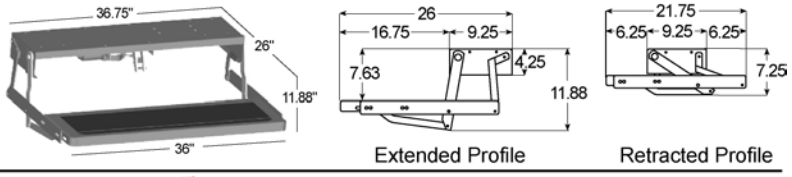

Series 31

Rise: 7" Run: 10.5"
Bolt pattern: 7.4" x 14.5"

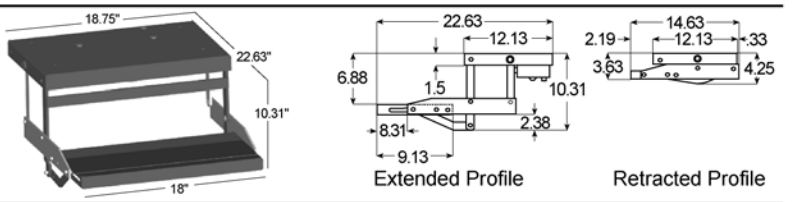

Series 33

Rise: 8" Run: 16.75"
Bolt pattern: 6" x 23.5"

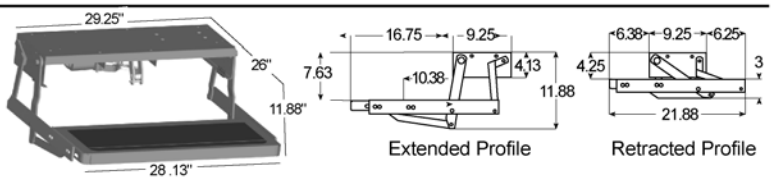

Series 35

Rise: 5" Run: 10.75"
Bolt pattern: 8" x 22"

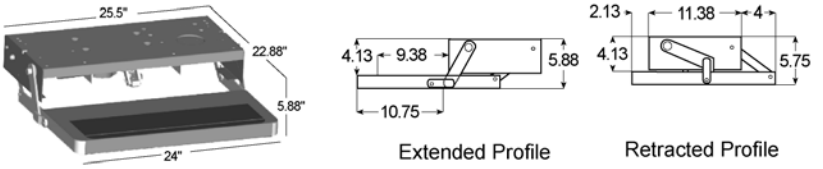

Series 36

Rise: 5" Run: 10.75"
Bolt pattern: 8" x 26"

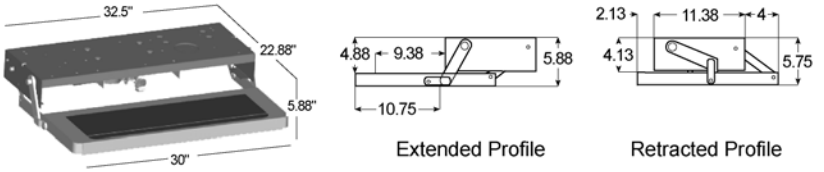

Series 37

Rise: 7" Run: 8.5"
Bolt pattern: Call

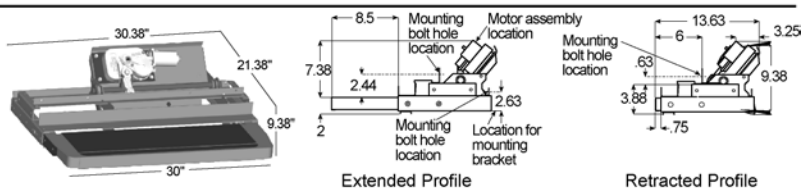

CCD-0011573 - REV: 8.24.2026

STEPS

To determine which step you have, look for a sticker on the underside of the top tread or mouting surface. If you can't locate it, measure the step and use these drawings to identify the step.

Series 38

Rise: 4" Run: 10.75"
Bolt pattern: 8" x 22"

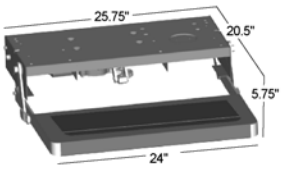

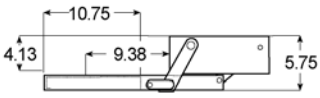

Extended Profile

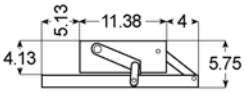

Retracted Profile

Series 39

Rise: 7" Run: 10"
Bolt pattern: 7.5" x 20.5"

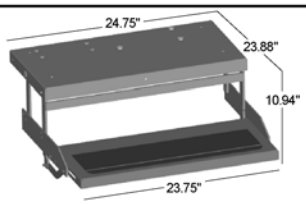

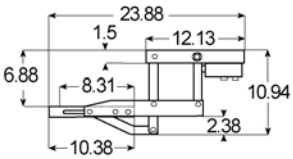

Extended Profile

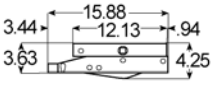

Retracted Profile

Double Tread Step Series

Series 22

Rise: 8" Run: 8"
Bolt pattern: 9" x 25.5"

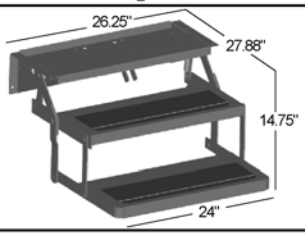

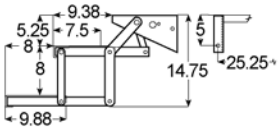

Extended Profile

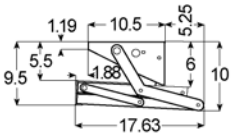

Retracted Profile

Series 32

Rise: 7" Run: 9"
Bolt pattern: 8" x 22"

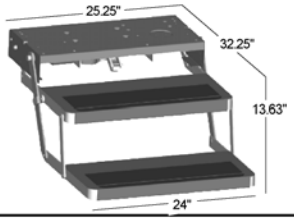

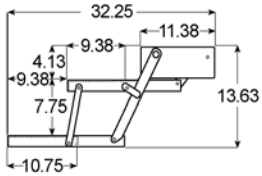

Extended Profile

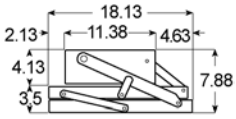

Retracted Profile

Series 34

Rise: 7" Run: 9"
Bolt pattern: 8" x 26"

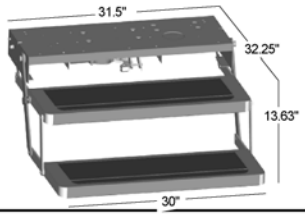

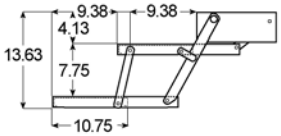

Extended Profile

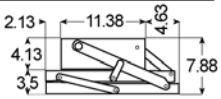

Retracted Profile

Series 40

Rise: 8" Run: 9"
Bolt pattern: 8" x 26"

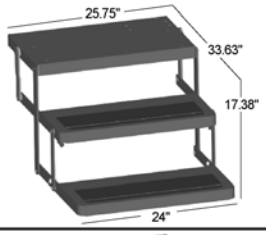

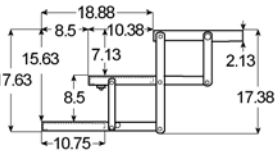

Extended Profile

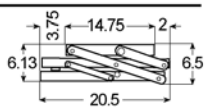

Retracted Profile

Series 42

Rise: 6" Run: 9"
Bolt pattern: 18" x 29"

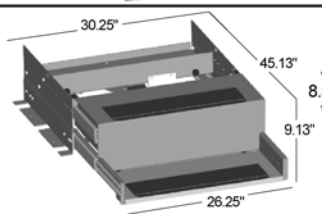

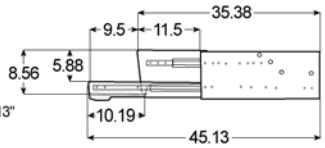

Extended Profile

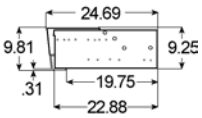

Retracted Profile

CCD-0011573 - REV: 8.24.2026

Steps

Currently Kwikee makes 19 different styles of electric steps; 10 with single treads; 5 with double treads; and 4 with triple treads. Each style is identified by a 'Series' number.

Triple Tread Step Series

Series 23

Rise: 8" Run: 8"
Bolt pattern: 9" x 25.25"

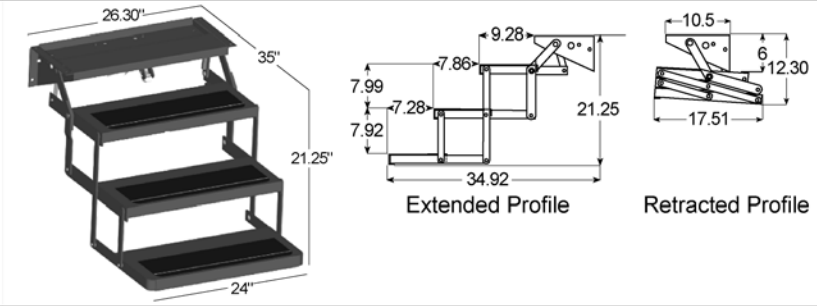

Series 24

Rise: 8" Run: 9"
Bolt pattern: 8" x 26"

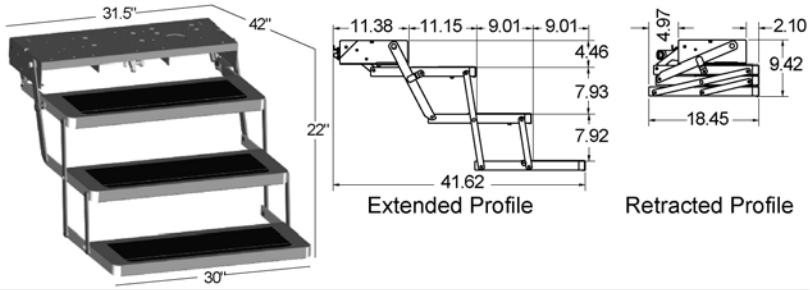

Series 25 7" Drop

Rise: 7" Run: 8"
Bolt pattern: 8" x 22"

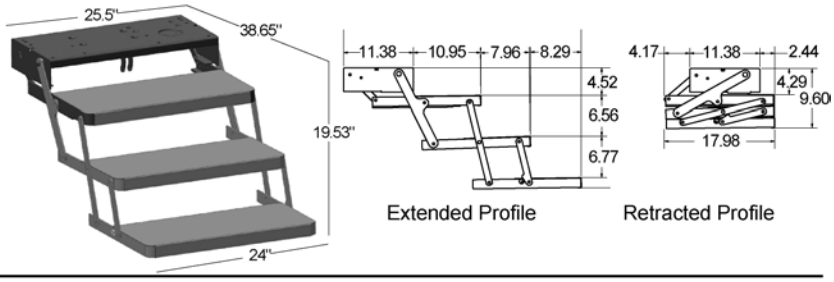

Series 25 8" Drop

Rise: 8" Run: 9"
Bolt pattern: 8" x 22"

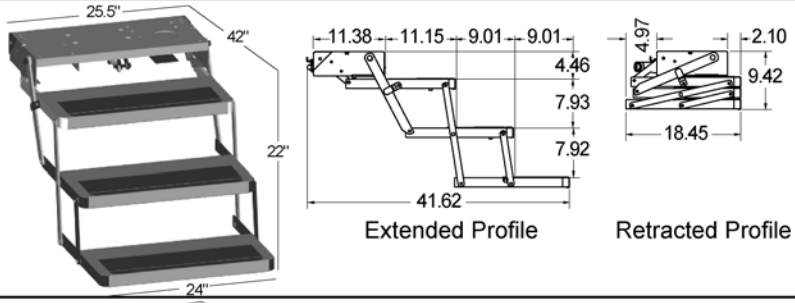

Series 44

Rise: 8" Run: 9"
Bolt pattern: 8" x 22"

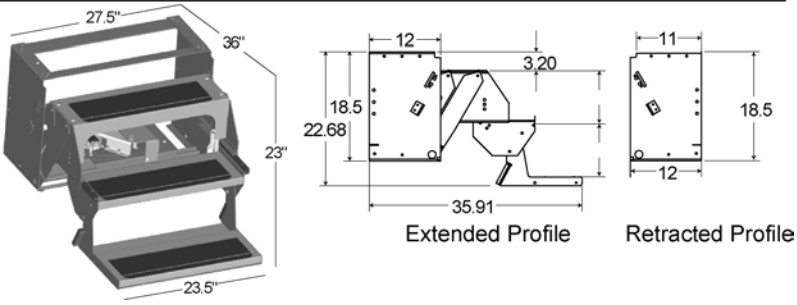

CCD-0011573 - REV: 8.24.2026

Steps improvements

In October of 2004, Kwikee began shipping steps with an integrated motor/gear box/linkage (**IMGL**). Steps with the IMGL require a 909510000 Control Unit. This section of the Service Training will cover repairs to steps that have the IMGL/9510 configuration. Steps shipped prior to October of 2004 may have a variety of motor/control unit configuration.

Any steps (except the 42 and 44 Series), regardless of the original motor/control unit combination, can be repaired using the current IMGL/9510 parts and procedures. If you are needing to repair a 42 or 44 Series, please call our Customer Service Department at (574) 537-8900.

Please note, if you are replacing the IMGL on a step that has any control other than a 909510000 Control Unit, you must also change the control unit. **Previous Control Units will not work correctly with the IMGL and the 9051 Control Unit will not work correctly with previous motor/gear box/linkage configurations.**

There are three IMGLs; one with each of the three linkages for Kwikee steps.

'A' LINKAGE IMGL ***fits 22, 23, 30, 32, 33, 34, 35, 36, 38, and 40 Series Steps.***

'B' LINKAGE IMGL ***fits 28, 31, 37, and 39 Series Steps.***

'C' LINKAGE IMGL ***fits 26 Series Steps.***

IMGL (integrated motor/gear box/linkage)

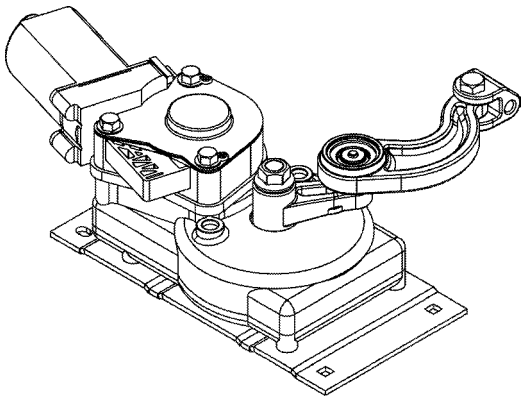

909510000 Control Unit

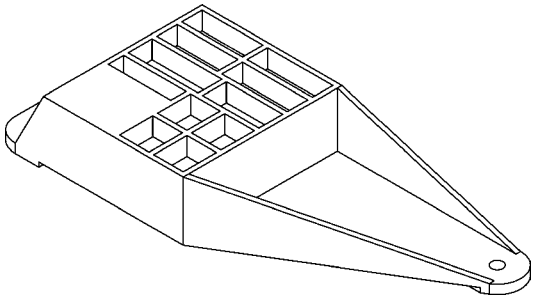

Kwikee manufactures a complete Replacement Kit for each of the three linkages. These kits include the IMGL (integrated motor/gear box/linkage,) the 9510 Control Unit, a four-way pigtail, a fastener kit, and installation documentation.

Repart Kit Part #	Linkage	Fits Step Series
909770000	'A' LINKAGE IMGL	22, 23, 30, 32, 33, 34, 35, 36, 38, 40
909772000	'B' LINKAGE IMGL	28, 31, 37, 39
909774000	'C' LINKAGE IMGL	26

CONTROL UNIT REPLACEMENT

For steps that already have the IMGL/909510000 Control, the 909510000 Control Unit can be replaced with the same part number but steps with any other Control Unit require a full replacement kit as listed above. The 909510000 Control Unit will not work correctly with any motor, gearbox configurations other than the IMGL.

CCD-0011573 - REV: 8.24.2026

INCREASED PERFORMANCE, RELIABILITY

NO MORE SPONGEY STEPS
The new IMGL (integrated motor/gear box/linkage) and control unit configuration provides a 40% 'stiffer' step. Steps feel stronger, run longer.

Kwikee®

PRODUCT IMPROVEMENT BULLETIN

ee.com Kwikee Products Company, Inc. 230 Davidson Avenue Cottage Grove, Oregon 97424-9545

Electric Step Improvements

Applies to Kwikee Step Series 22, 23, 26, 28, 30, 31, 32, 33, 34, 35, 36, 37,38, 39, and 40

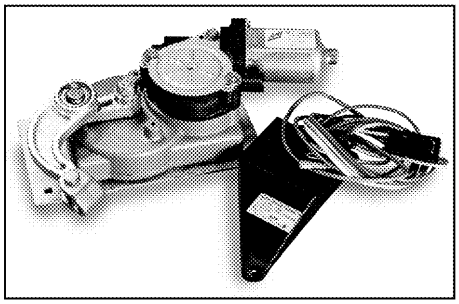

Kwikee announces the replacement of specific parts on Kwikee Electric Steps with improved components. New parts include:

- Linkage and Gear Box
- Motor, and
- Control Unit

on Kwikee Electric Step Series 22, 23, 26, 28, 30, 31, 32, 33, 34, 35, 36, 37, 38, 39, and 40.

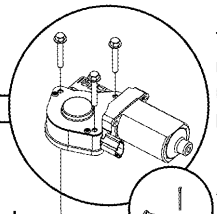

The step improvements were made to increase performance, reliability, and longevity of step operation. The changes also simplify parts replacement procedures.

Improved linkage and gear box *Investment cast zinc plated steel linkage asssembly is strong and more resistant to corrosion. Brass spherical outer cage hardened ball in linkage is stronger, wears longer, and will not oblong. Improved gear box has fully sealed dual ball bearing for greater efficiency and no maintenance. Case halves seal for consistent alignment and gear protection from the elements.*

Improved motor *40% more motor torque give step a strong lock-out and solid feel.*

Improved control unit logic *Step is always open when door is open. Step can be locked in the extended position. Step cannot be locked in retracted position. Automatic ignition override makes step follow the door.*

'A' Linkage used on Step Series 22, 23, 30, 32, 33, 34, 35, 36, 38, and 40

'B' Linkage used on Step Series 28, 31, 37, 39

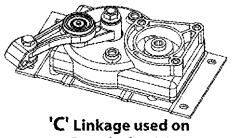

'C' Linkage used on Step Series 26

New Owners Manual A new **#888 Owners Manual** ships with all steps that have the improved step components.

An important change covered in the **#888 Owners Manual** is the **"Override Switch"** (previously call the "Power Switch" in Kwikee #880 manuals.) The name of the switch changed because of a change in functionality from the former "Power Switch."

The new Control Units are equipped with an ignition override system designed to prevent the vehicle from being driven with the step in the extended position. When the step is locked in the extended position **(OVERRIDE SWTICH IS IN THE 'ON' POSITION)**, the door is closed, and the ignition is turned on, the ignition override system will engage and the step will automatically retract.

Please note that this is a change from the old "Power Switch," which needed to be in the "OFF" position to lock the step out.

If you have questions, contact your Kwikee salesperson or call the Kwikee Service Department at 1-800-736-9961.

PUB. Step Improvements / Released 12/04

CCD-0011573 - REV: 8.24.2026

KwikTip: Control Unit Logic

With the new IMGL and Control Unit logic:

WHEN THE **OVERRIDE SWITCH IS 'ON'**
THE STEP IS **LOCKED** IN THE
EXTENDED POSITION

IF THE **IGNITION**
IS TURNED **'ON'**

(WHETHER THE
OVERRIDE SWITCH
IS 'ON' OR 'OFF)

THE STEP WILL FOLLOW THE DOOR

Door Open = Step Extended

Door Closed = Step Retracted

CCD-0011573 - REV: 8.24.2026

KwikTip: Look for the Stickers

The new IMGL and Control Unit can easily be identified by the following stickers:

'214' on the printed sticker identifies an IMGL (integrated motor/gear box/linkage)

909510000 printed on the control sticker identifies a 909510000 Control Unit

CCD-0011573 - REV: 8.24.2026

22 SERIES
Step Replacement Guide

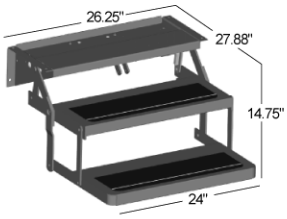

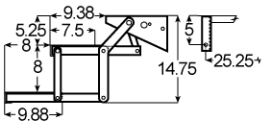

Extended Profile

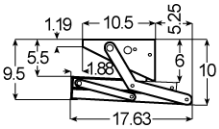

Retracted Profile

STEP SERIES NUMBER

To determine correct replacement part numbers, it is necessary to know the ***Step Series Number***. It is located in the Owners Manual and printed under the top step.

If you can not locate the number, measure the step and refer to the dimensioned drawings above. Confirm that you are using the correct step series replacement parts guide.

RISE: 8" RUN: 8"
Mounting bolt pattern: 9 x 25.25"

Part #902200016
24" tread with Motor and Switch Kit (#905316000)

Part #902206025
24" tread with Motor, Control Unit and Switch Kit (#905325000)

CHART 1
Replacement Parts Kits for Series Steps 22, 23, 30, 32, 33, 34, 35, 36, 38, and 40

Parts Key #	Description	Replacement Kit Part #
1	**Control Unit only**	
n/a	**Step Frame only**	**908022000**
n/a	**Step Light only**	**909004000**
3	**Cotter and Clevis pin**	
1-4	**IMGL 'A'/Control Replacement Kit** *909510000 Control, IMGL (Integrated Motor, Gear Box, Linkage A), Cotter and Clevis pin, Four-way pigtail, Fasteners*	**909770000**

Door Switches

Part # White* (Closed)	Part # Black** (Open)	Description
905312000	**905323000**	Magnetic, small rectangular
905314000	**905324000**	Magnetic, 3/4" core round
905306000	**905326000**	Magnetic, large rectangular
905307000	**905327000**	Magnetic, 3/8" core round
905302000	**905328000**	Plated plunger switch

* Used for all color controls manufactured prior to 2/99. Does NOT include "black" 909506000, 909507000.

** Used for "black" controls since 2/99 including 909506000, 909507000, and 909508000.

Rocker Style Power Switch

Part #	Description
905305000	For all fully automatic steps.

Self-Center Rocker Switch

Part #	Description
905316000	For steps NOT equipped with control units.

Motor Assembly Drawing and Parts Key Numbers

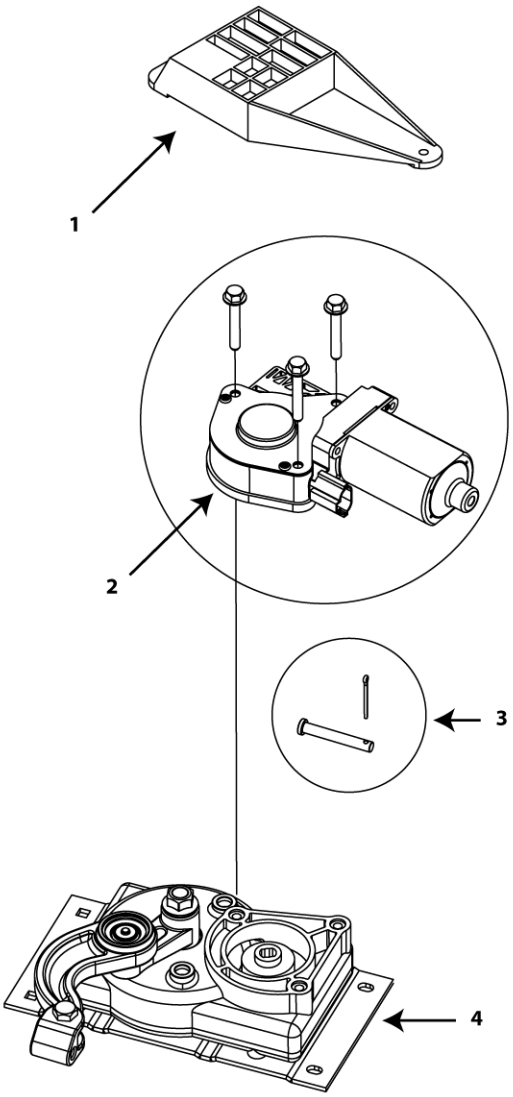

23 SERIES
Step Replacement Guide

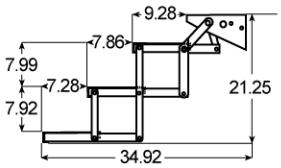

Extended Profile

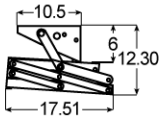

Retracted Profile

STEP SERIES NUMBER

To determine correct replacement part numbers, it is necessary to know the ***Step Series Number***. It is located in the Owners Manual and printed under the top step.

If you can not locate the number, measure the step and refer to the dimensioned drawings above. Confirm that you are using the correct step series replacement parts guide.

RISE: 8" RUN: 8"
Mounting bolt pattern: 9 x 25.25"

Part #902300016
24" tread with
High-torque Motor and
Switch Kit (#905316000)

Part #902308025
24" tread with
High-torque Motor,
Control Unit and Switch Kit (#905325000)

CHART 1
Replacement Parts Kits for Series Steps 22, 23, 30, 32, 33, 34, 35, 36, 38, and 40

Parts Key #	Description	Replacement Kit Part #
1	**Control Unit only**	
n/a	**Step Frame only**	**908023000**
n/a	**Step Light only**	**909004000**
3	**Cotter and Clevis pin**	
1-4	**IMGL 'A'/Control Replacement Kit** *909510000 Control, IMGL (Integrated Motor, Gear Box, Linkage A), Cotter and Clevis pin, Four-way pigtail, Fasteners*	**909770000**

Door Switches

Part # White* (Closed)	Part # Black** (Open)	Description
905312000	**905323000**	Magnetic, small rectangular
905314000	**905324000**	Magnetic, 3/4" core round
905306000	**905326000**	Magnetic, large rectangular
905307000	**905327000**	Magnetic, 3/8" core round
905302000	**905328000**	Plated plunger switch

* Used for all color controls manufactured prior to 2/99. Does NOT include "black" 909506000, 909507000.

** Used for "black" controls since 2/99 including 909506000, 909507000, and 909508000.

Rocker Style Power Switch

Part #	Description
905305000	For all fully automatic steps.

Self-Center Rocker Switch

Part #	Description
905316000	For steps NOT equipped with control units.

Motor Assembly Drawing and Parts Key Numbers

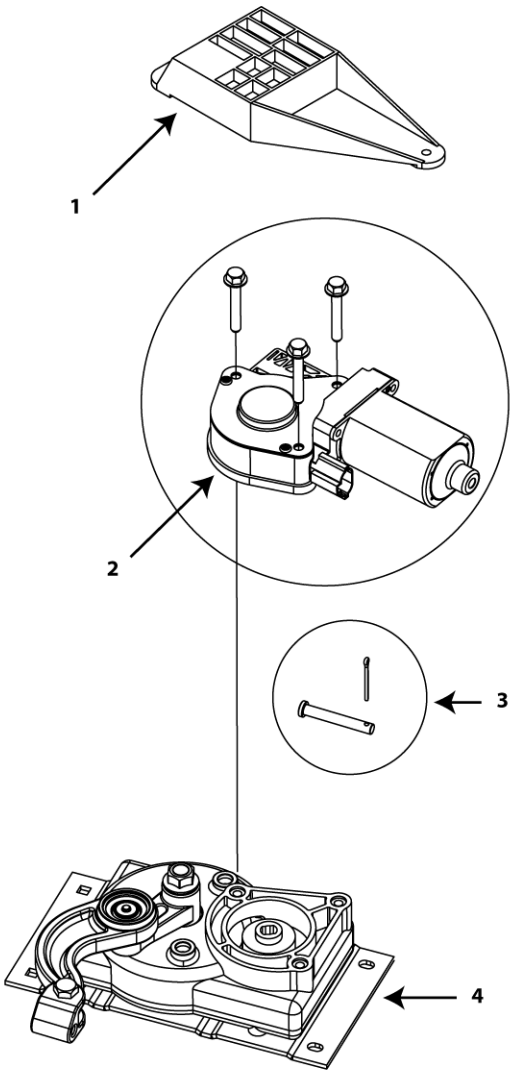

CCD-0011573 - REV: 8.24.2026

CCD-0011573 - REV: 8.24.2026

26 SERIES
Step Replacement Guide

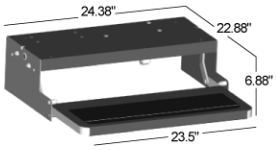

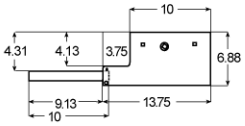

Extended Profile

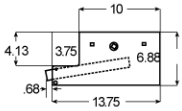

Retracted Profile

STEP SERIES NUMBER

To determine correct replacement part numbers, it is necessary to know the ***Step Series Number***. It is located in the Owners Manual and printed under the top step.

If you can not locate the number, measure the step and refer to the dimensioned drawings above. Confirm that you are using the correct step series replacement parts guide.

RISE: 5" RUN: 8.5"
Mounting bolt pattern: 7.5 x 20.5"

Part #902600016
23.5" tread with
Motor and Switch Kit
(#905316000)

Part #902606025
23.5" tread with Motor,
Control Unit and Switch Kit (#905325000)

CHART 1
Replacement Parts Kits for Series Steps 22, 23, 30, 32, 33, 34, 35, 36, 38, and 40

Parts Key #	Description	Replacement Kit Part #
1	**Control Unit only**	
n/a	**Step Frame only**	**908026000**
n/a	**Step Light only**	**909004000**
3	**Cotter and Clevis pin**	
1-4	**IMGL 'C'/Control Replacement Kit** *909510000 Control, IMGL (Integrated Motor, Gear Box, Linkage A), Cotter and Clevis pin, Four-way pigtail, Fasteners*	**909774000**

Door Switches

Part # White* (Closed)	Part # Black** (Open)	Description
905312000	**905323000**	Magnetic, small rectangular
905314000	**905324000**	Magnetic, 3/4" core round
905306000	**905326000**	Magnetic, large rectangular
905307000	**905327000**	Magnetic, 3/8" core round
905302000	**905328000**	Plated plunger switch

* Used for all color controls manufactured prior to 2/99. Does NOT include "black" 909506000, 909507000.

** Used for "black" controls since 2/99 including 909506000, 909507000, and 909508000.

Rocker Style Power Switch

Part #	Description
905305000	For all fully automatic steps.

Self-Center Rocker Switch

Part #	Description
905316000	For steps NOT equipped with control units.

Motor Assembly Drawing and Parts Key Numbers

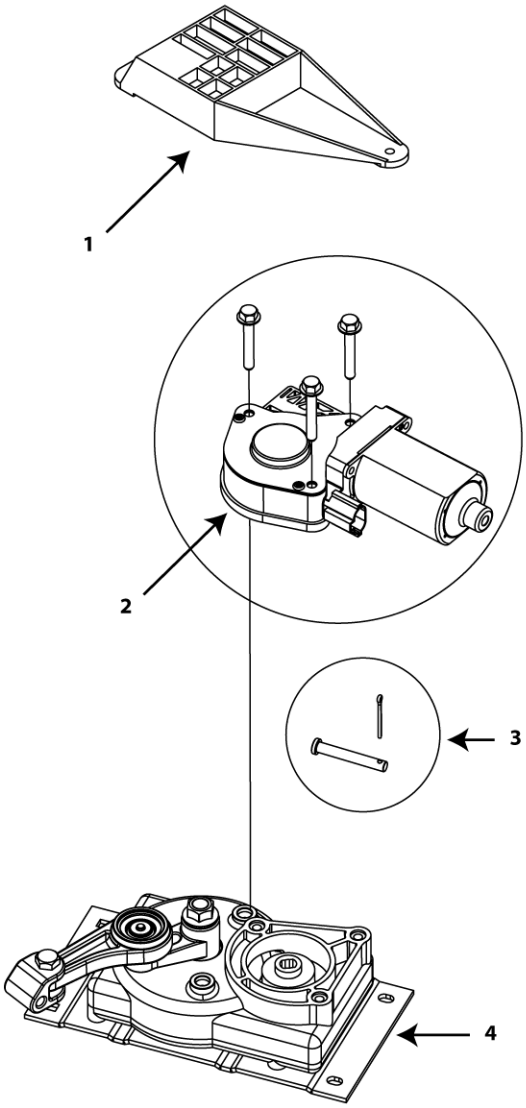

CCD-0011573 - REV: 8.24.2026

28 SERIES
Step Replacement Guide

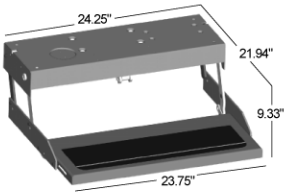

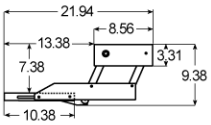

Extended Profile

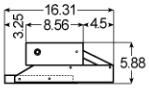

Retracted Profile

STEP SERIES NUMBER

To determine correct replacement part numbers, it is necessary to know the ***Step Series Number***. It is located in the Owners Manual and printed under the top step.

If you can not locate the number, measure the step and refer to the dimensioned drawings above. Confirm that you are using the correct step series replacement parts guide.

RISE: 7" RUN: 10"
Mounting bolt pattern: 6.5 x 22"

Part #902800016
23.75" tread with
Motor and Switch Kit
(#905316000)

Part #902806025
23.75" tread with Motor,
Control Unit and Switch Kit (#905325000)

CHART 1
Replacement Parts Kits for Series Steps 22, 23, 30, 32, 33, 34, 35, 36, 38, and 40

Parts Key #	Description	Replacement Kit Part #
1	**Control Unit only**	
n/a	**Step Frame only**	**908028000**
n/a	**Step Light only**	**909004000**
3	**Cotter and Clevis pin**	
1-4	**IMGL 'B'/Control Replacement Kit** *909510000 Control, IMGL (Integrated Motor, Gear Box, Linkage A), Cotter and Clevis pin, Four-way pigtail, Fasteners*	**909772000**

Door Switches

Part # White* (Closed)	Part # Black** (Open)	Description
905312000	**905323000**	Magnetic, small rectangular
905314000	**905324000**	Magnetic, 3/4" core round
905306000	**905326000**	Magnetic, large rectangular
905307000	**905327000**	Magnetic, 3/8" core round
905302000	**905328000**	Plated plunger switch

* Used for all color controls manufactured prior to 2/99. Does NOT include "black" 909506000, 909507000.

** Used for "black" controls since 2/99 including 909506000, 909507000, and 909508000.

Rocker Style Power Switch

Part #	Description
905305000	For all fully automatic steps.

Self-Center Rocker Switch

Part #	Description
905316000	For steps NOT equipped with control units.

Motor Assembly Drawing and Parts Key Numbers

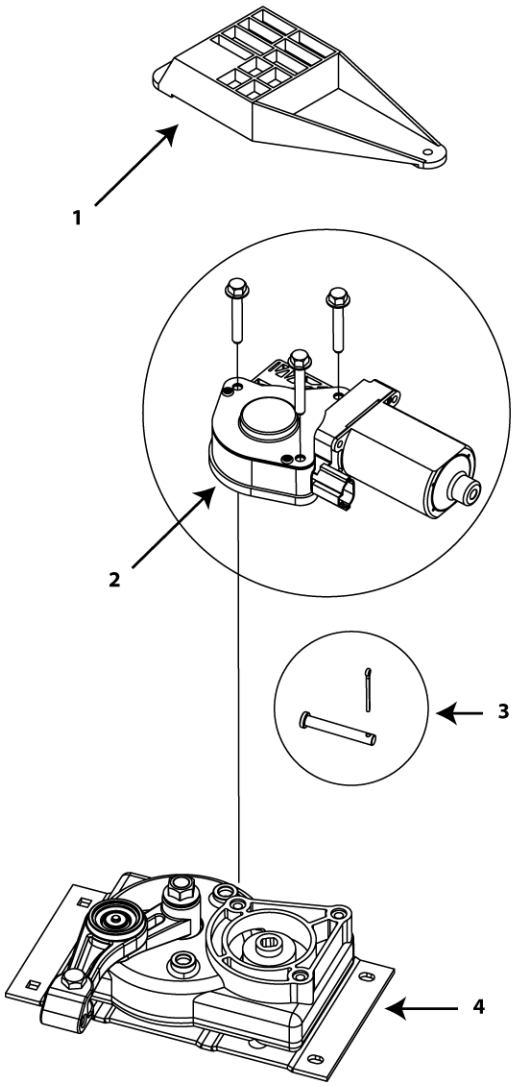

CCD-0011573 - REV: 8.24.2026

30 SERIES
Step Replacement Guide

Available with brackets for Van applications

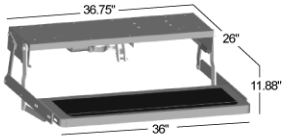

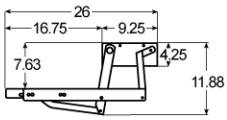

Extended Profile

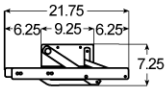

Retracted Profile

STEP SERIES NUMBER

To determine correct replacement part numbers, it is necessary to know the ***Step Series Number***. It is located in the Owners Manual and printed under the top step.

If you can not locate the number, measure the step and refer to the dimensioned drawings above. Confirm that you are using the correct step series replacement parts guide.

RISE: 7.5" RUN: 16.75"
Mounting bolt pattern: 6 x 31"

RV or VAN: Part #903000016
36" tread with Motor and no control unit

RV or VAN: Part #903006000
36" tread with Motor and Control Unit

VAN: Part #903006002
36" tread, includes Wiring Kit (#907541000) and Door Switch (#905323000)

VAN: Part #909315000
Plastic Splash Cover

CHART 1
Replacement Parts Kits for Series Steps 22, 23, 30, 32, 33, 34, 35, 36, 38, and 40

Parts Key #	Description	Replacement Kit Part #
1	**Control Unit only**	
n/a	**Step Frame only**	**908030000**
n/a	**Step Light only**	**909004000**
2	**Cotter and Clevis pin only**	
1-4	**IMGL 'A'/Control Replacement Kit** *909510000 Control, IMGL (Integrated Motor, Gear Box, Linkage A), Cotter and Clevis pin, Four-way pigtail, Fasteners*	**909770000**

Door Switches

Part # White* (Closed)	Part # Black** (Open)	Description
905312000	**905323000**	Magnetic, small rectangular
905314000	**905324000**	Magnetic, 3/4" core round
905306000	**905326000**	Magnetic, large rectangular
905307000	**905327000**	Magnetic, 3/8" core round
905302000	**905328000**	Plated plunger switch

* Used for all color controls manufactured prior to 2/99. Does NOT include "black" 909506000, 909507000.

** Used for "black" controls since 2/99 including 909506000, 909507000, and 909508000.

Rocker Style Power Switch

Part #	Description
905305000	For all fully automatic steps.

Self-Center Rocker Switch

Part #	Description
905316000	For steps NOT equipped with control units.

Motor Assembly Drawing and Parts Key Numbers

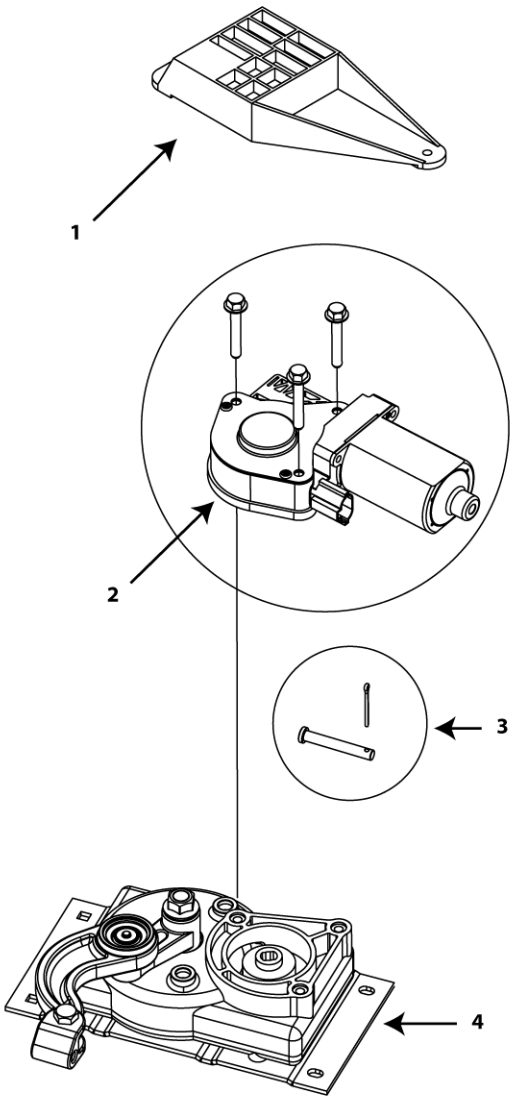

31 SERIES
Step Replacement Guide

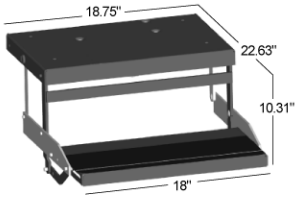

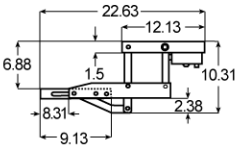

Extended Profile

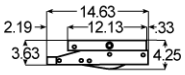

Retracted Profile

STEP SERIES NUMBER

To determine correct replacement part numbers, it is necessary to know the ***Step Series Number***. It is located in the Owners Manual and printed under the top step.

If you can not locate the number, measure the step and refer to the dimensioned drawings above. Confirm that you are using the correct step series replacement parts guide.

RISE: 7" RUN: 10.5"
Mounting bolt pattern: 7.5 x 14.5"

Part #903100016
18" tread with Motor and Switch Kit (#905316000)

Part #903106025
18" tread with Motor, Control Unit and Switch Kit (#905325000)

CHART 1
Replacement Parts Kits for Series Steps 22, 23, 30, 32, 33, 34, 35, 36, 38, and 40

Parts Key #	Description	Replacement Kit Part #
1	**Control Unit only**	
n/a	**Step Frame only**	**908031000**
n/a	**Step Light only**	**909004000**
3	**Cotter and Clevis pin**	
1-4	**IMGL 'B'/Control Replacement Kit** *909510000 Control, IMGL (Integrated Motor, Gear Box, Linkage A), Cotter and Clevis pin, Four-way pigtail, Fasteners*	**909772000**

Door Switches

Part # White* (Closed)	Part # Black** (Open)	Description
905312000	**905323000**	Magnetic, small rectangular
905314000	**905324000**	Magnetic, 3/4" core round
905306000	**905326000**	Magnetic, large rectangular
905307000	**905327000**	Magnetic, 3/8" core round
905302000	**905328000**	Plated plunger switch

* Used for all color controls manufactured prior to 2/99. Does NOT include "black" 909506000, 909507000.

** Used for "black" controls since 2/99 including 909506000, 909507000, and 909508000.

Rocker Style Power Switch

Part #	Description
905305000	For all fully automatic steps.

Self-Center Rocker Switch

Part #	Description
905316000	For steps NOT equipped with control units.

Motor Assembly Drawing and Parts Key Numbers

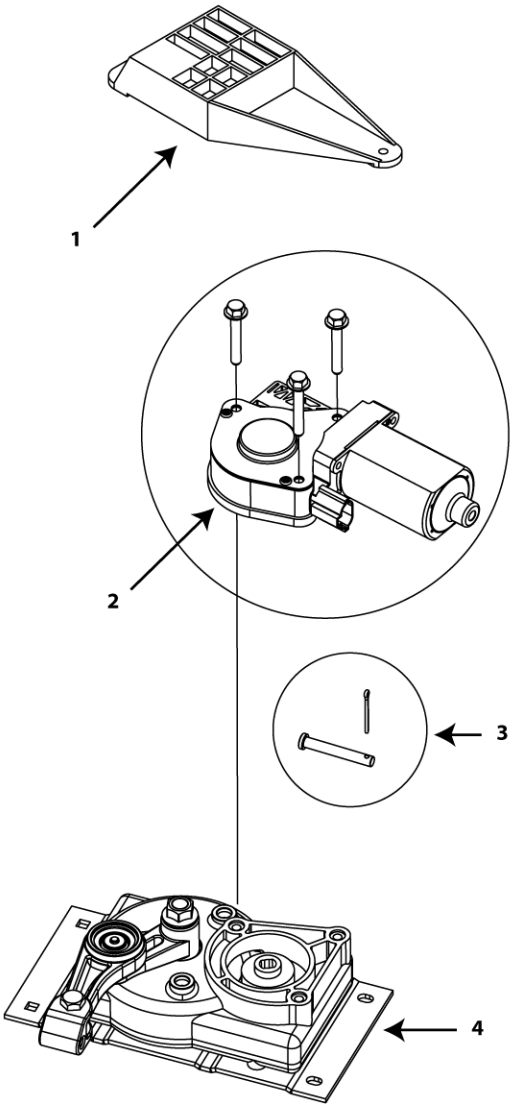

CCD-0011573 - REV: 8.24.2026

CCD-0011573 - REV: 8.24.2026

32 SERIES
Step Replacement Guide

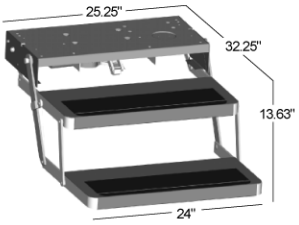

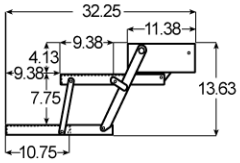

Extended Profile

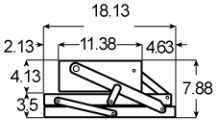

Retracted Profile

STEP SERIES NUMBER

To determine correct replacement part numbers, it is necessary to know the ***Step Series Number***. It is located in the Owners Manual and printed under the top step.

If you can not locate the number, measure the step and refer to the dimensioned drawings above. Confirm that you are using the correct step series replacement parts guide.

RISE: 7" RUN: 9"
Mounting bolt pattern: 8 x 22"

Part #903200016
24" tread with Motor and Switch Kit (#905316000)

Part #903206025
24" tread with Motor, Control Unit and Switch Kit (#905325000)

CHART 1
Replacement Parts Kits for Series Steps 22, 23, 30, 32, 33, 34, 35, 36, 38, and 40

Parts Key #	Description	Replacement Kit Part #
1	**Control Unit only**	
n/a	**Step Frame only**	**908032000**
n/a	**Step Light only**	**909004000**
3	**Cotter and Clevis pin**	
1-4	**IMGL 'A'/Control Replacement Kit** *909510000 Control, IMGL (Integrated Motor, Gear Box, Linkage A), Cotter and Clevis pin, Four-way pigtail, Fasteners*	**909770000**

Door Switches

Part # White* (Closed)	Part # Black** (Open)	Description
905312000	**905323000**	Magnetic, small rectangular
905314000	**905324000**	Magnetic, 3/4" core round
905306000	**905326000**	Magnetic, large rectangular
905307000	**905327000**	Magnetic, 3/8" core round
905302000	**905328000**	Plated plunger switch

* Used for all color controls manufactured prior to 2/99. Does NOT include "black" 909506000, 909507000.

** Used for "black" controls since 2/99 including 909506000, 909507000, and 909508000.

Rocker Style Power Switch

Part #	Description
905305000	For all fully automatic steps.

Self-Center Rocker Switch

Part #	Description
905316000	For steps NOT equipped with control units.

Motor Assembly Drawing and Parts Key Numbers

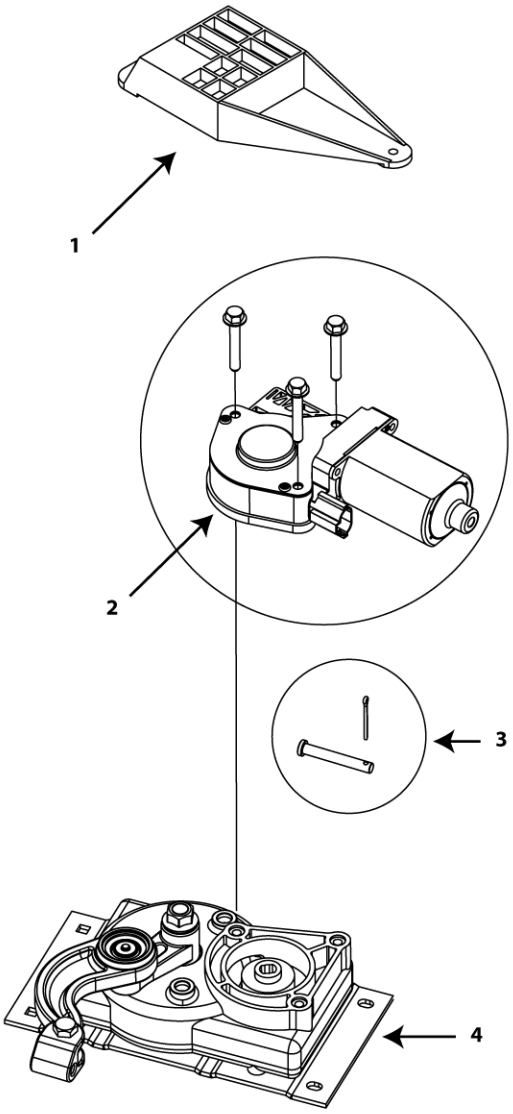

CCD-0011573 - REV: 8.24.2026

33 SERIES
Step Replacement Guide

Available with brackets for Van applications

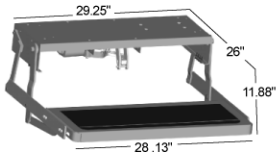

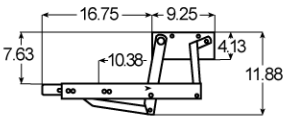

Extended Profile

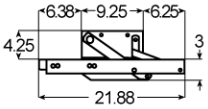

Retracted Profile

STEP SERIES NUMBER

To determine correct replacement part numbers, it is necessary to know the ***Step Series Number***. It is located in the Owners Manual and printed under the top step.

If you can not locate the number, measure the step and refer to the dimensioned drawings above. Confirm that you are using the correct step series replacement parts guide.

RISE: 8" RUN: 16.75"
Mounting bolt pattern: 6.5 x 22"

RV: Part #903300016
28.13" tread with Motor and Switch Kit (#905316000)

RV: Part #903306025
28.13" tread with Motor, Control Unit and Switch Kit (#905325000)

VANS: Part #903300000
28.13" tread with Motor and no Control Unit

VANS: Part #903306000
28.13" tread with Motor and Control Unit

VANS: Part #909315000
Plastic Splash Cover for 30 and 33 Series Steps

CHART 1
Replacement Parts Kits for Series Steps 22, 23, 30, 32, 33, 34, 35, 36, 38, and 40

Parts Key #	Description	Replacement Kit Part #
1	**Control Unit only**	
n/a	**Step Frame only**	**908033000**
n/a	**Step Light only**	**909004000**
3	**Cotter and Clevis pin**	
1-4	**IMGL 'A'/Control Replacement Kit** *909510000 Control, IMGL (Integrated Motor, Gear Box, Linkage A), Cotter and Clevis pin, Four-way pigtail, Fasteners*	**909770000**

Door Switches

Part # White* (Closed)	Part # Black** (Open)	Description
905312000	**905323000**	Magnetic, small rectangular
905314000	**905324000**	Magnetic, 3/4" core round
905306000	**905326000**	Magnetic, large rectangular
905307000	**905327000**	Magnetic, 3/8" core round
905302000	**905328000**	Plated plunger switch

* Used for all color controls manufactured prior to 2/99. Does NOT include "black" 909506000, 909507000.

** Used for "black" controls since 2/99 including 909506000, 909507000, and 909508000.

Rocker Style Power Switch

Part #	Description
905305000	For all fully automatic steps.

Self-Center Rocker Switch

Part #	Description
905316000	For steps NOT equipped with control units.

Motor Assembly Drawing and Parts Key Numbers

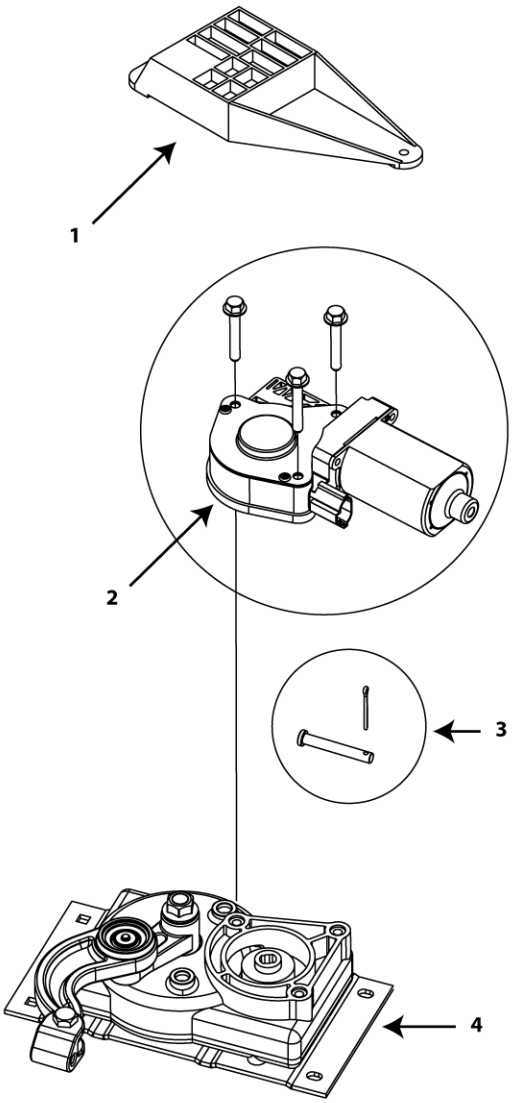

34 SERIES
Step Replacement Guide

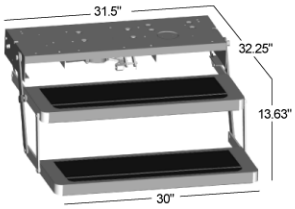

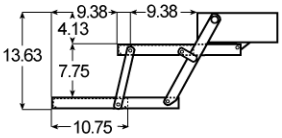

Extended Profile

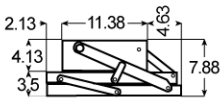

Retracted Profile

STEP SERIES NUMBER

To determine correct replacement part numbers, it is necessary to know the ***Step Series Number***. It is located in the Owners Manual and printed under the top step.

If you can not locate the number, measure the step and refer to the dimensioned drawings above. Confirm that you are using the correct step series replacement parts guide.

RISE: 7" RUN: 9"
Mounting bolt pattern: 8 x 26"

Part #903400016
30" tread with Motor and Switch Kit (#905316000)

Part #903406025
30" tread with Motor, Control Unit and Switch Kit (#905325000)

CHART 1
Replacement Parts Kits for Series Steps 22, 23, 30, 32, 33, 34, 35, 36, 38, and 40

Parts Key #	Description	Replacement Kit Part #
1	**Control Unit only**	
n/a	**Step Frame only**	**908034000**
n/a	**Step Light only**	**909004000**
3	**Cotter and Clevis pin**	
1-4	**IMGL 'A'/Control Replacement Kit** *909510000 Control, IMGL (Integrated Motor, Gear Box, Linkage A), Cotter and Clevis pin, Four-way pigtail, Fasteners*	**909770000**

Door Switches

Part # White* (Closed)	Part # Black** (Open)	Description
905312000	**905323000**	Magnetic, small rectangular
905314000	**905324000**	Magnetic, 3/4" core round
905306000	**905326000**	Magnetic, large rectangular
905307000	**905327000**	Magnetic, 3/8" core round
905302000	**905328000**	Plated plunger switch

* Used for all color controls manufactured prior to 2/99. Does NOT include "black" 909506000, 909507000.

** Used for "black" controls since 2/99 including 909506000, 909507000, and 909508000.

Rocker Style Power Switch

Part #	Description
905305000	For all fully automatic steps.

Self-Center Rocker Switch

Part #	Description
905316000	For steps NOT equipped with control units.

Motor Assembly Drawing and Parts Key Numbers

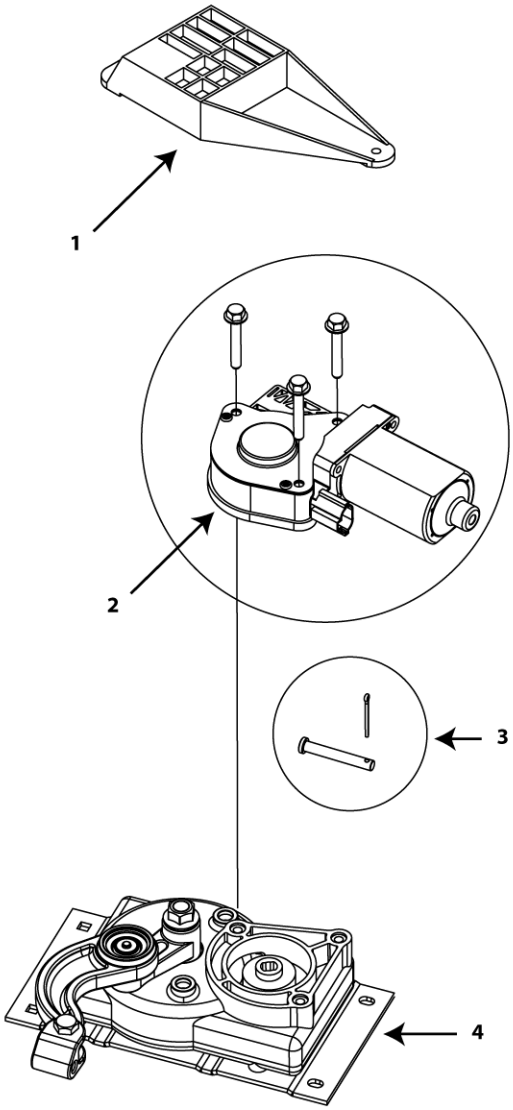

CCD-0011573 - REV: 8.24.2026

35 SERIES
Step Replacement Guide

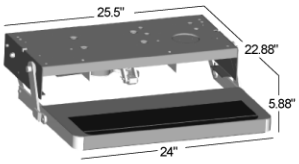

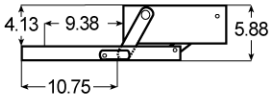

Extended Profile

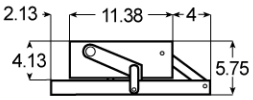

Retracted Profile

RISE: 5" RUN: 10.75"
Mounting bolt pattern: 8 x 22"

Part #903500016
24" tread with Motor and Switch Kit (#905316000)

Part #903506025
24" tread with Motor, Control Unit and Switch Kit (#905325000)

CHART 1
Replacement Parts Kits for Series Steps 22, 23, 30, 32, 33, 34, 35, 36, 38, and 40

Parts Key #	Description	Replacement Kit Part #
1	**Control Unit only**	
n/a	**Step Frame only**	**908035000**
n/a	**Step Light only**	**909004000**
3	**Cotter and Clevis pin**	
1-4	**IMGL 'A'/Control Replacement Kit** *909510000 Control, IMGL (Integrated Motor, Gear Box, Linkage A), Cotter and Clevis pin, Four-way pigtail, Fasteners*	**909770000**

Door Switches

Part # White* (Closed)	Part # Black** (Open)	Description
905312000	**905323000**	Magnetic, small rectangular
905314000	**905324000**	Magnetic, 3/4" core round
905306000	**905326000**	Magnetic, large rectangular
905307000	**905327000**	Magnetic, 3/8" core round
905302000	**905328000**	Plated plunger switch

* Used for all color controls manufactured prior to 2/99. Does NOT include "black" 909506000, 909507000.

** Used for "black" controls since 2/99 including 909506000, 909507000, and 909508000.

Rocker Style Power Switch

Part #	Description
905305000	For all fully automatic steps.

Self-Center Rocker Switch

Part #	Description
905316000	For steps NOT equipped with control units.

Motor Assembly Drawing and Parts Key Numbers

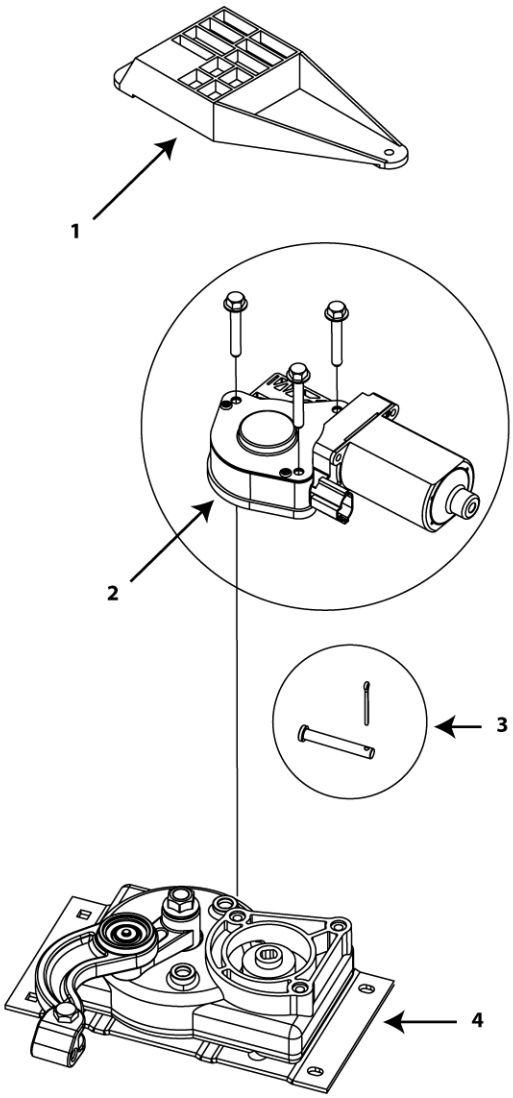

STEP SERIES NUMBER

To determine correct replacement part numbers, it is necessary to know the ***Step Series Number***. It is located in the Owners Manual and printed under the top step.

If you can not locate the number, measure the step and refer to the dimensioned drawings above. Confirm that you are using the correct step series replacement parts guide.

CCD-0011573 - REV: 8.24.2026

CCD-0011573 - REV: 8.24.2026

36 SERIES
Step Replacement Guide

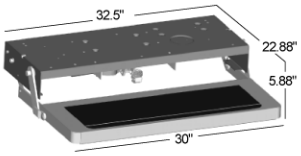

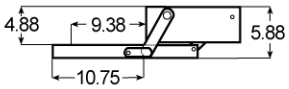

Extended Profile

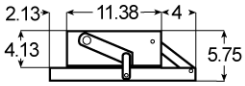

Retracted Profile

STEP SERIES NUMBER

To determine correct replacement part numbers, it is necessary to know the ***Step Series Number***. It is located in the Owners Manual and printed under the top step.

If you can not locate the number, measure the step and refer to the dimensioned drawings above. Confirm that you are using the correct step series replacement parts guide.

RISE: 5" RUN: 10.75"
Mounting bolt pattern: 8 x 26"

Part #903600016
30" tread with Motor and Switch Kit (#905316000)

Part #903606025
30" tread with Motor, Control Unit and Switch Kit (#905325000)

CHART 1
Replacement Parts Kits for Series Steps 22, 23, 30, 32, 33, 34, 35, 36, 38, and 40

Parts Key #	Description	Replacement Kit Part #
1	**Control Unit only**	
n/a	**Step Frame only**	**908036000**
n/a	**Step Light only**	**909004000**
3	**Cotter and Clevis pin**	
1-4	**IMGL 'A'/Control Replacement Kit** *909510000 Control, IMGL (Integrated Motor, Gear Box, Linkage A), Cotter and Clevis pin, Four-way pigtail, Fasteners*	**909770000**

Door Switches

Part # White* (Closed)	Part # Black** (Open)	Description
905312000	**905323000**	Magnetic, small rectangular
905314000	**905324000**	Magnetic, 3/4" core round
905306000	**905326000**	Magnetic, large rectangular
905307000	**905327000**	Magnetic, 3/8" core round
905302000	**905328000**	Plated plunger switch

* Used for all color controls manufactured prior to 2/99. Does NOT include "black" 909506000, 909507000.

** Used for "black" controls since 2/99 including 909506000, 909507000, and 909508000.

Rocker Style Power Switch

Part #	Description
905305000	For all fully automatic steps.

Self-Center Rocker Switch

Part #	Description
905316000	For steps NOT equipped with control units.

Motor Assembly Drawing and Parts Key Numbers

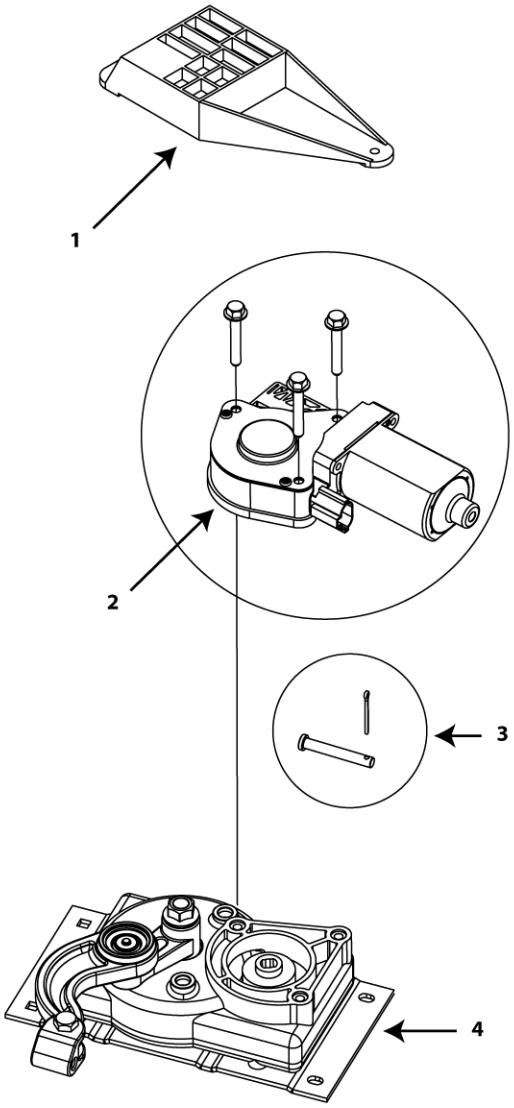

37 SERIES
Step Replacement Guide

Available with brackets for Van applications

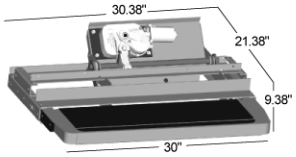

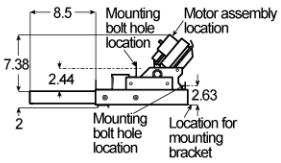

Extended Profile

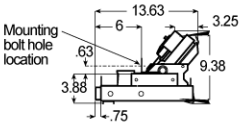

Retracted Profile

STEP SERIES NUMBER

To determine correct replacement part numbers, it is necessary to know the ***Step Series Number***. It is located in the Owners Manual and printed under the top step.

If you can not locate the number, measure the step and refer to the dimensioned drawings above. Confirm that you are using the correct step series replacement parts guide.

RISE: 7" RUN: 8.5"
Mounting bolt pattern:
Call for drawing

RV: Part #903700016
30" tread with Motor and Switch Kit (#905316000)

RV: Part #903707025
30" tread with Motor, Control Unit (#909507000) and Switch Kit (#905325000)

VANS: Part #903700000
30" tread with Motor and no Control Unit

VANS:
Part #903707000
30" tread with Motor and Control Unit (#909507000)

CHART 1
Replacement Parts Kits for Series Steps 22, 23, 30, 32, 33, 34, 35, 36, 38, and 40

Parts Key #	Description	Replacement Kit Part #
1	**Control Unit only**	
n/a	**Step Frame only**	**908039000**
n/a	**Step Light only**	**909004000**
3	**Cotter and Clevis pin**	
1-4	**IMGL 'B'/Control Replacement Kit** *909510000 Control, IMGL (Integrated Motor, Gear Box, Linkage A), Cotter and Clevis pin, Four-way pigtail, Fasteners*	**909772000**

Door Switches

Part # White* (Closed)	Part # Black** (Open)	Description
905312000	**905323000**	Magnetic, small rectangular
905314000	**905324000**	Magnetic, 3/4" core round
905306000	**905326000**	Magnetic, large rectangular
905307000	**905327000**	Magnetic, 3/8" core round
905302000	**905328000**	Plated plunger switch

* Used for all color controls manufactured prior to 2/99. Does NOT include "black" 909506000, 909507000.

** Used for "black" controls since 2/99 including 909506000, 909507000, and 909508000.

Rocker Style Power Switch

Part #	Description
905305000	For all fully automatic steps.

Self-Center Rocker Switch

Part #	Description
905316000	For steps NOT equipped with control units.

Motor Assembly Drawing and Parts Key Numbers

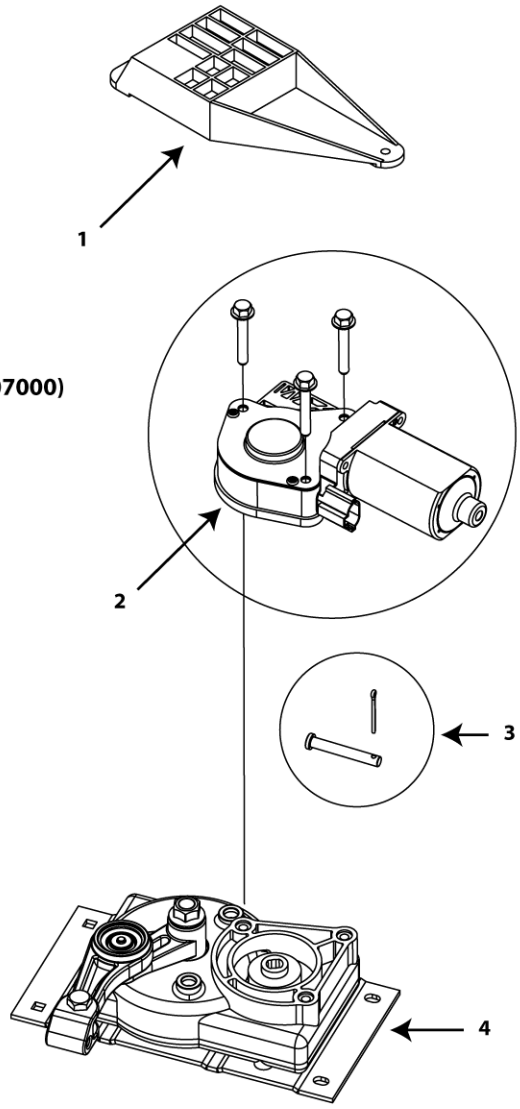

CCD-0011573 - REV: 8.24.2026

CCD-0011573 - REV: 8.24.2026

38 SERIES
Step Replacement Guide

Available with brackets for Van applications

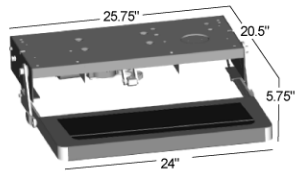

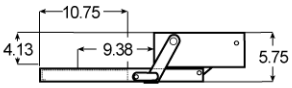

Extended Profile

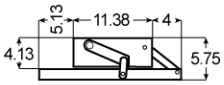

Retracted Profile

STEP SERIES NUMBER

To determine correct replacement part numbers, it is necessary to know the ***Step Series Number***. It is located in the Owners Manual and printed under the top step.

If you can not locate the number, measure the step and refer to the dimensioned drawings above. Confirm that you are using the correct step series replacement parts guide.

RISE: 4" RUN: 10.75"
Mounting bolt pattern: 8 x 22"

RV: Part #903800016
24" tread with Motor and Switch Kit (#905316000)

RV: Part #903806025
24" tread with Motor, Control Unit and Switch Kit (#905325000)

VANS:
Part #903800000
24" tread with Motor and no Control Unit

VANS:
Part #903806000
24" tread with Motor and Control Unit

CHART 1
Replacement Parts Kits for Series Steps 22, 23, 30, 32, 33, 34, 35, 36, 38, and 40

Parts Key #	Description	Replacement Kit Part #
1	**Control Unit only**	
n/a	**Step Frame only**	**908038000**
n/a	**Step Light only**	**909004000**
3	**Cotter and Clevis pin**	
1-4	**IMGL 'A'/Control Replacement Kit** *909510000 Control, IMGL (Integrated Motor, Gear Box, Linkage A), Cotter and Clevis pin, Four-way pigtail, Fasteners*	**909770000**

Door Switches

Part # White* (Closed)	Part # Black** (Open)	Description
905312000	**905323000**	Magnetic, small rectangular
905314000	**905324000**	Magnetic, 3/4" core round
905306000	**905326000**	Magnetic, large rectangular
905307000	**905327000**	Magnetic, 3/8" core round
905302000	**905328000**	Plated plunger switch

* Used for all color controls manufactured prior to 2/99. Does NOT include "black" 909506000, 909507000.

** Used for "black" controls since 2/99 including 909506000, 909507000, and 909508000.

Rocker Style Power Switch

Part #	Description
905305000	For all fully automatic steps.

Self-Center Rocker Switch

Part #	Description
905316000	For steps NOT equipped with control units.

Motor Assembly Drawing and Parts Key Numbers

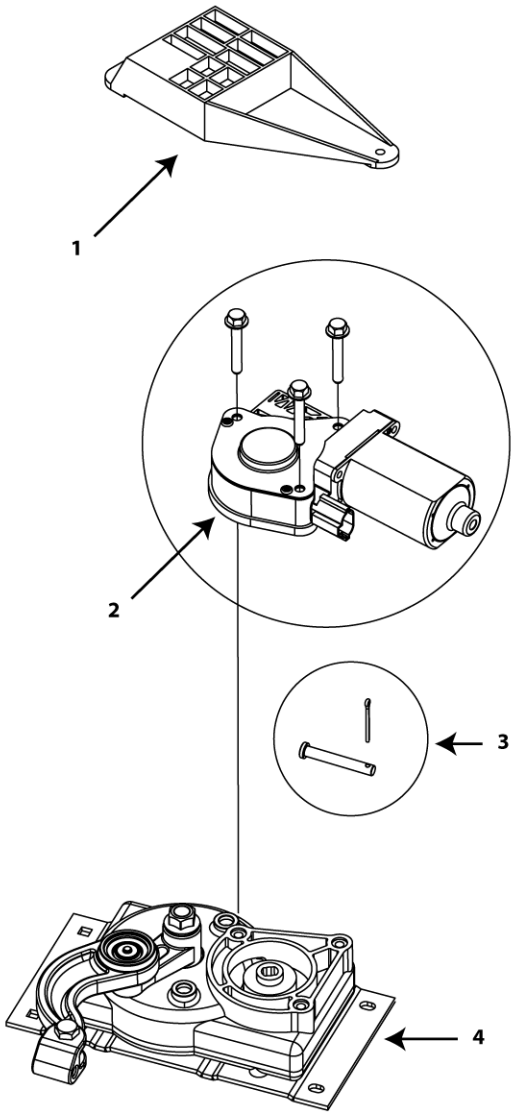

39 SERIES
Step Replacement Guide

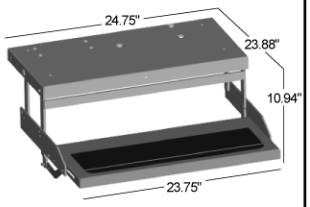

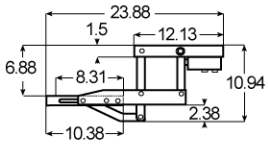

Extended Profile

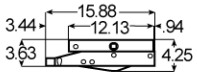

Retracted Profile

STEP SERIES NUMBER

To determine correct replacement part numbers, it is necessary to know the ***Step Series Number***. It is located in the Owners Manual and printed under the top step.

If you can not locate the number, measure the step and refer to the dimensioned drawings above. Confirm that you are using the correct step series replacement parts guide.

RISE: 7" RUN: 10"
Mounting bolt pattern: 7.5 x 20.5"

Part #903900016
23.75" tread with Motor and Switch Kit (#905316000)

Part #903906025
23.75" tread with Motor, Control Unit and Switch Kit (#905325000)

CHART 1
Replacement Parts Kits for Series Steps 22, 23, 30, 32, 33, 34, 35, 36, 38, and 40

Parts Key #	Description	Replacement Kit Part #
1	**Control Unit only**	
n/a	**Step Frame only**	**908039000**
n/a	**Step Light only**	**909004000**
2	**Cotter and Clevis pin**	
1-4	**IMGL 'B'/Control Replacement Kit** *909510000 Control, IMGL (Integrated Motor, Gear Box, Linkage A), Cotter and Clevis pin, Four-way pigtail, Fasteners*	**909772000**

Door Switches

Part # White* (Closed)	Part # Black** (Open)	Description
905312000	**905323000**	Magnetic, small rectangular
905314000	**905324000**	Magnetic, 3/4" core round
905306000	**905326000**	Magnetic, large rectangular
905307000	**905327000**	Magnetic, 3/8" core round
905302000	**905328000**	Plated plunger switch

* Used for all color controls manufactured prior to 2/99. Does NOT include "black" 909506000, 909507000.

** Used for "black" controls since 2/99 including 909506000, 909507000, and 909508000.

Rocker Style Power Switch

Part #	Description
905305000	For all fully automatic steps.

Self-Center Rocker Switch

Part #	Description
905316000	For steps NOT equipped with control units.

Motor Assembly Drawing and Parts Key Numbers

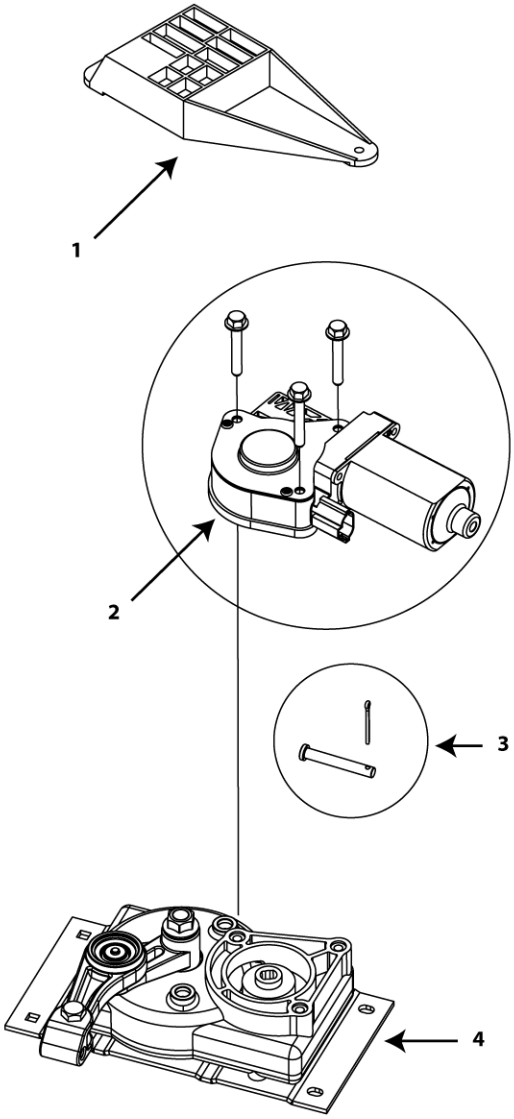

CCD-0011573 - REV: 8.24.2026

CCD-0011573 - REV: 8.24.2026

40 SERIES
Step Replacement Guide

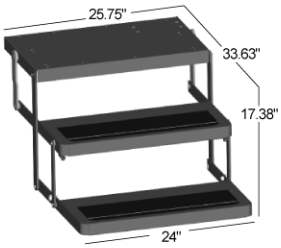

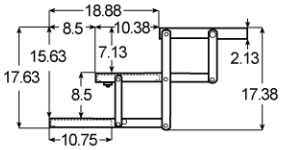

Extended Profile

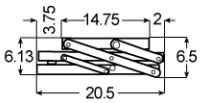

Retracted Profile

STEP SERIES NUMBER

To determine correct replacement part numbers, it is necessary to know the ***Step Series Number***. It is located in the Owners Manual and printed under the top step.

If you can not locate the number, measure the step and refer to the dimensioned drawings above. Confirm that you are using the correct step series replacement parts guide.

RISE: 8" RUN: 10"
Mounting bolt pattern: 12.87 x 20.5"

Part #904000016
24" tread with
High-torque Motor and
Switch Kit (#905316000)

Part #904008025
24" tread with
High-torque Motor,
Control Unit and Switch Kit (#905325000)

CHART 1
Replacement Parts Kits for Series Steps 22, 23, 30, 32, 33, 34, 35, 36, 38, and 40

Parts Key #	Description	Replacement Kit Part #
1	**Control Unit only**	
n/a	**Step Frame only**	**908040000**
n/a	**Step Light only**	**909004000**
3	**Cotter and Clevis pin**	
1-4	**IMGL 'A'/Control Replacement Kit** *909510000 Control, IMGL (Integrated Motor, Gear Box, Linkage A), Cotter and Clevis pin, Four-way pigtail, Fasteners*	**909770000**

Door Switches

Part # White* (Closed)	Part # Black** (Open)	Description
905312000	**905323000**	Magnetic, small rectangular
905314000	**905324000**	Magnetic, 3/4" core round
905306000	**905326000**	Magnetic, large rectangular
905307000	**905327000**	Magnetic, 3/8" core round
905302000	**905328000**	Plated plunger switch

* Used for all color controls manufactured prior to 2/99. Does NOT include "black" 909506000, 909507000.

** Used for "black" controls since 2/99 including 909506000, 909507000, and 909508000.

Rocker Style Power Switch

Part #	Description
905305000	For all fully automatic steps.

Self-Center Rocker Switch

Part #	Description
905316000	For steps NOT equipped with control units.

Motor Assembly Drawing and Parts Key Numbers

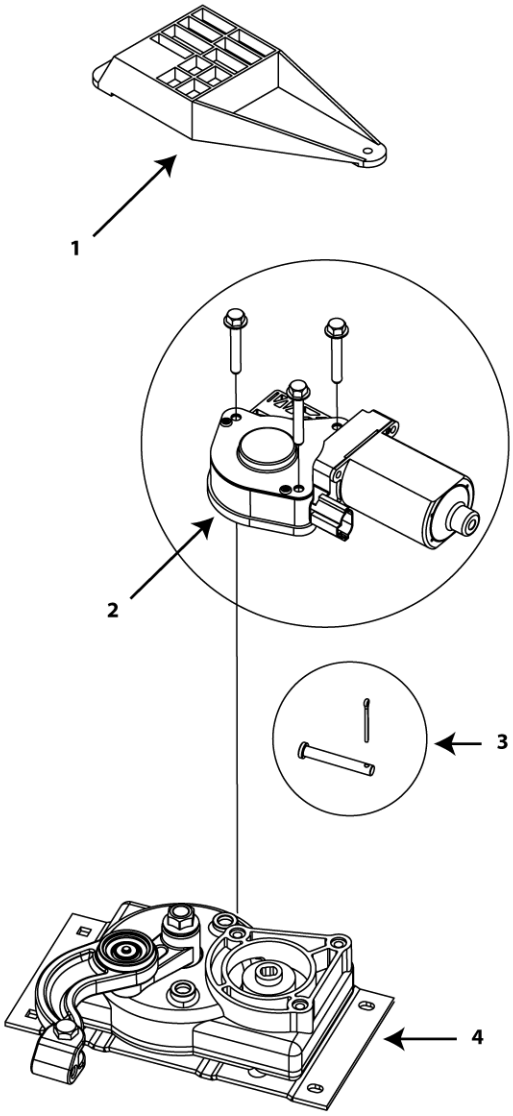

CCD-0011573 - REV: 8.24.2026

Kwikee®

Installation Instructions #214

© 2005 Kwikee Document release date 02/05
Document #1421480

IMGL* and 9510 Control Replacement Kits

*Integrated Motor/Gear Box/Linkage

Before attempting any electric step assembly repair work, please read all of the following instructions.

Disconnect the power at the vehicle battery once the step is extended.

Refer to the Electric Step Replacement Part Schematic, Figure 1, for item numbers referenced in these instructions.

IMGL (Integrated Motor/Gear Box/Linkage) Assembly

Instructions for removing and replacing the IMGL Assembly.

1. On Van Steps, remove plastic splash cover if so equipped. If the step is locked in the retracted (up) position where the plastic cover cannot be removed, the step tread will have to be disassembled to access the plastic cover. To disassemble the tread, remove the (8) 1/4-20 x 1" long hex head bolts in the tread side rails connecting the tread and the sliding blocks to the side rail. This will allow the tread to be dropped out of the way to access the plastic cover. Reassemble the tread after removing the cover.
2. To remove the IMGL assembly from the step it is easiest if the step is partially or fully extended. If possible extend the step with the standard door switch operation.

NOTE: See drawings on Page 2 and 3 for item numbers specified in the following steps.

3. ***Steps using a control Unit:*** Unplug the 4-way connector to the control unit (Item #6). Disconnect the wiring between the motor and the control unit (Item 7).

   Steps without a control Unit: Cut the wires at the butt connectors approximately 12 " from the motor.
4. Remove the cotter pin from the clevis pin at the linkage assembly.
5. Remove the clevis pin (Item #2) from the cast "U" block in the end of the linkage assembly (Items #3, #4, or #5). Note the direction the clevis pin goes into the cast block. If the step is in its locked position, the pin may have to be pried or driven out of the block. The step tread(s) should now swing freely, if not check for a bent step frame or jammed pivot point(s).
6. Unbolt the motor assembly from the step frame.
7. Install new IMGL assembly on step frame and tighten all mounting bolts.
8. Install the clevis pin (Item #2) through the drive arms attached to the step frame and the cast block in the linkage assembly (Items #3, #4 or #5). Be sure to reinstall the clevis pin in the same direction it was removed. Install the cotter pin in the clevis pin.
9. Reconnect the wiring:
   A. Wiring to a 909510000 Control Unit - Plug the motor connector from the Control Unit into the motor.

   B. Wiring to toggle switch only- Using the motor adapter pigtail connect the mating connector to the connector on the motor. Connect the red and yellow pigtail wires to the vehicle switch wires using heat shrink insulated butt connectors.

   Plug in the 4-way connector between the control unit and the vehicle.

NOTE: *On 23 and 34 Series steps, see the mounting instruction, Figure 3 and 4, when replacing a #8287 double reduction motor with a permanent magnet motor assembly.*

IMGL and Control Unit Replacement Kits

Part #	Linkage	For Step Series
909770000	'A'	22, 23, 30, 32, 33, 34, 35, 36, 38, 40
909772000	'B'	28, 31, 37, 39
909774000	'C'	26

Replacement Kits contain an IMGL (integrated motor/gear box/linkage assembly, a Control Unit, four-way pigtail, and fastener kit.

Replacing the motor, gear box, and linkage with the IMGL on a step that has **any control other than a 909510000 Control Unit** (as included) requires the installation of the 909510000 Control included in the Replacement Kit.

Note: Any control unit or motor repair needed on steps using a Delco Field wound motor (part number 8002,8279,8278,8287) requires the IMGL and Control Unit included in the Replacement Kit.

Table of Contents

IMGL Replacement 1
Control Unit Replacement 2
Series 23 & 24 Motor Replacement 4

CCD-0011573 - REV: 8.24.2026

CONTROL UNIT

Instructions for removing and replacing the control unit.

Control unit #909510000 requires a normally open switch. If you are replacing a #9513, #9516, #9590 control unit you *MUST* also replace the door switch. The new control will *not* work with older, normally closed switches.

Proceed to the following steps after completing IMGL Assembly Removal steps 1-3.

1. ***Controls prior to the 4-way Packard style connector*** - Cut the molded rubber 4-way connector pigtail off just above the vehicle half of the butt connectors. Since all manufacturers use different colored wires for vehicle wiring, take a moment to note what color wires from the vehicle are connected to the white, red, brown and yellow wires of the pigtail. Strip the vehicle wires back and connect the new Packard style pigtail connector to the vehicle wiring using heat shrink insulated butt connectors. Make sure that the vehicle wires that were connected to the old pigtail are reattached to the new pigtail in the identical way.

NOTE: Van steps *using door switch only operation will have two wires coming from the vehicle. Cut the wires just above the connector and butt connect the pigtail wires to the vehicle wiring. Make sure that the vehicle wires that were connected to the old pigtail are connected to the new pigtail in the identical way.*

2. Disconnect the black wire leading from the control unit to the understep light at the connector. Do not cut this wire.

NOTE: *Not all steps are equipped with an understep light.*

3. On steps with a blue, red, green, yellow, brown, or orange control unit, remove the screw securing the green wire from the control unit to the step frame. Save the screw for securing the green wire on the new control unit. On orange control units manufactured after 1991 remove the screw securing the 31" long 10 ga. green ground wire from the control unit to the vehicle chassis.

IMGL Assembly Drawing and Parts Key Numbers

FIGURE 1

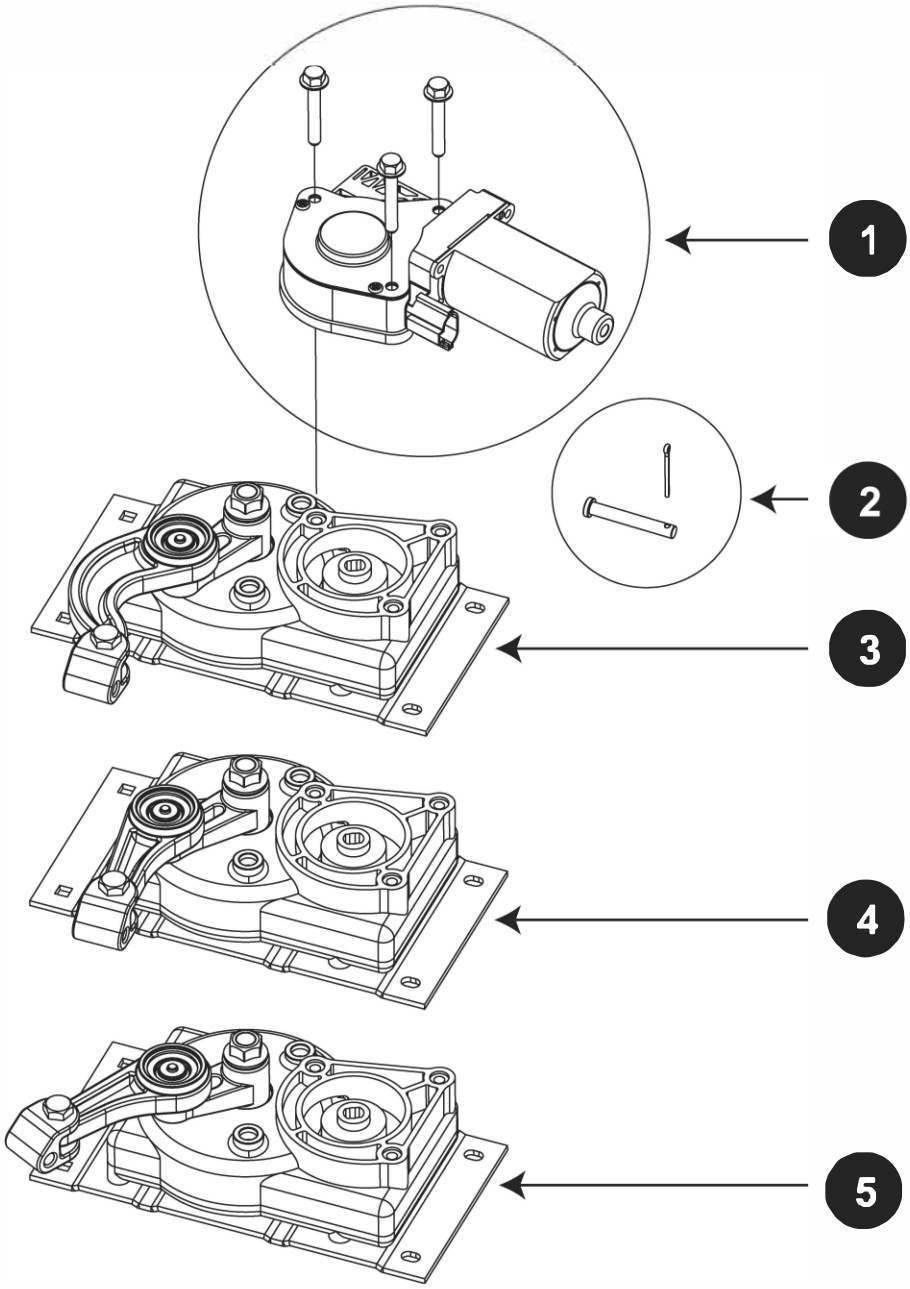

Item Number	Description
1	Motor and screws
2	Cotter and clevis pins
3	Gear box with linkage 'A'
4	Gear box with linkage 'B'
5	Gear box with linkage 'C'

CCD-0011573 - REV: 8.24.2026

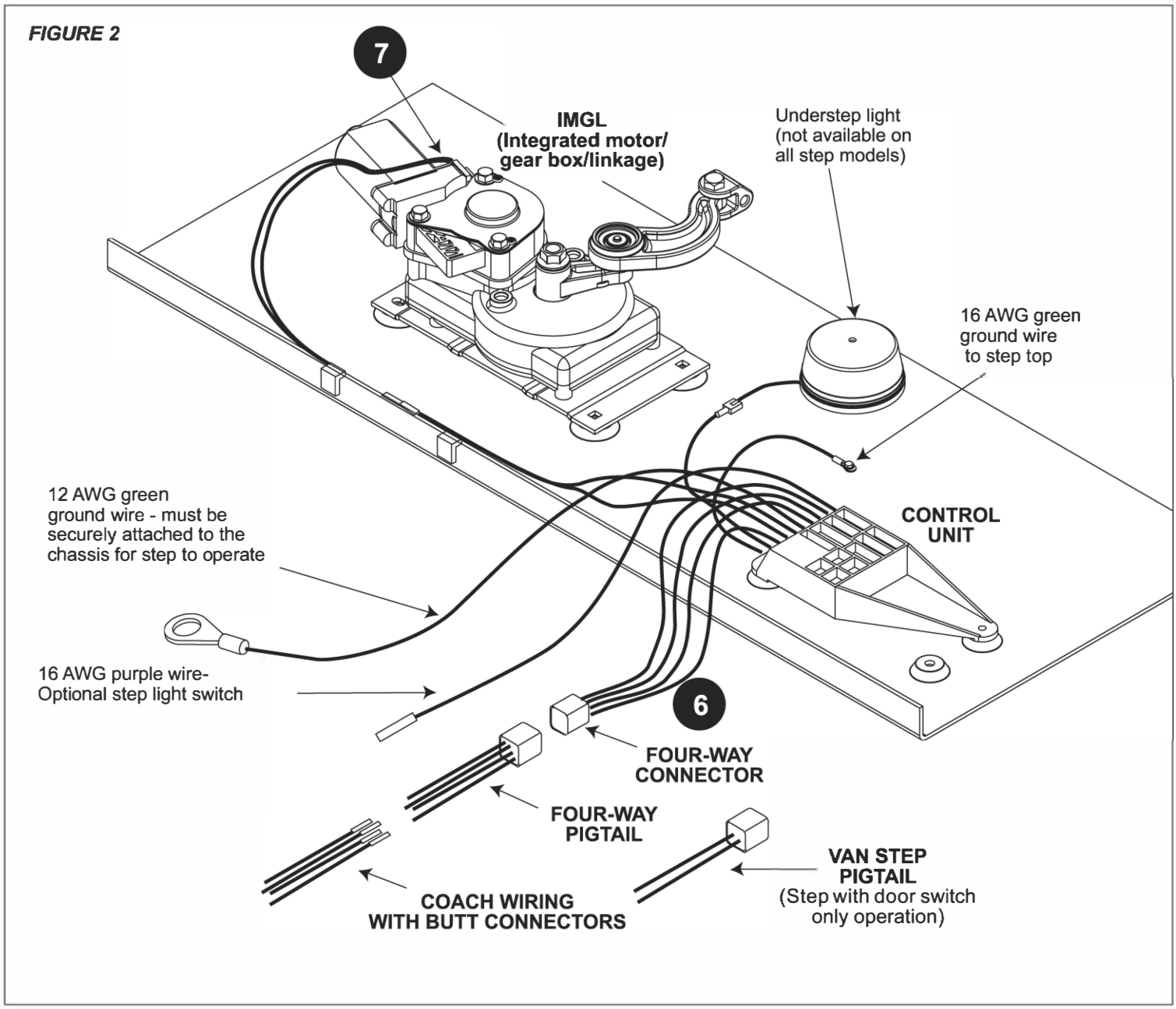

4. Remove the old control unit from the step frame. Save the mounting screws for mounting the new control unit to the step frame.

5. Using the screws saved from the old control, mount the new control to the step frame.

6. Reconnect the wiring:
A. Ground the 16 ga. green wire from the control unit to the step frame. Remove any corrosion at the attachment point. Attach it placing the external tooth lock washer supplied with the new control unit between the ring terminal on the end of the green wire and the step frame.

B. Attach the 31" long 12 ga. green wire to the vehicle chassis. Scrape the connection point clear for a good ground connection. On steps with a braided ground cable, the braided cable may be removed.

C. Connect the black wire from the control unit to the understep light. On steps not equipped with an understep light, wrap the black wire to protect it from the weather and secure it to keep it from dangling.

D. Connect the connector to the step motor.

NOTE: *The 909510000 Control Unit is to be used only with the AM Equipment 214 motor. The 214 number will be on a sticker on the motor.*

7. Reinstall the Splash cover if the step was so equipped.

8. Reconnect the vehicle battery.

9. Test the step functions.

CCD-0011573 - REV: 8.24.2026

23 and 34 Series Step Motor Replacement

The four-way connector should be disconnected and the old gearbox assembly should already be removed from the step top as previously described.

1. If the step frame is mounted flush against the step mounting surface, the step will have to be removed to access the top side of the step frame.
2. The hole pattern for the new IMGL assembly does not line up properly with the old mounting holes. See ***Figure 3*** for a mounting diagram for the 23 Series Step and ***Figure 4*** for the 34 Series Step.

NOTE: *All four mounting bolts must be used to attach the motor assembly to the step frame or the step may not operate properly and damage to the step may occur.*

3. Bolt down the motor assembly and install the clevis pin and cotter pin as described in IMGL Assembly replacement step #8 on Page 1.
4. Remount the step to the vehicle.

NOTE: *If you are installing a control unit, It will be easier to do this while the step is removed from the vehicle.*

See Figure 4 for important information on remounting 34 Series steps flush against the step mounting surface.

NOTE A: *If the step is mounted flush against the mounting surface, the step must be removed from the vehicle before drilling the 9/32" dia. hole for attaching the motor assembly.*

NOTE B: *The 1/4" flat washers are used to shim the permanent magnet motor assembly away from the step top so the motor assembly will sit level. This is important for proper step operation.*

NOTE C: *If the step was originally installed flush against the step well, a 1/4" thick shim may be needed (not provided) so the motor assembly mounting bolt heads will clear the mounting surface.*

FIGURE 3: 23 Series Step

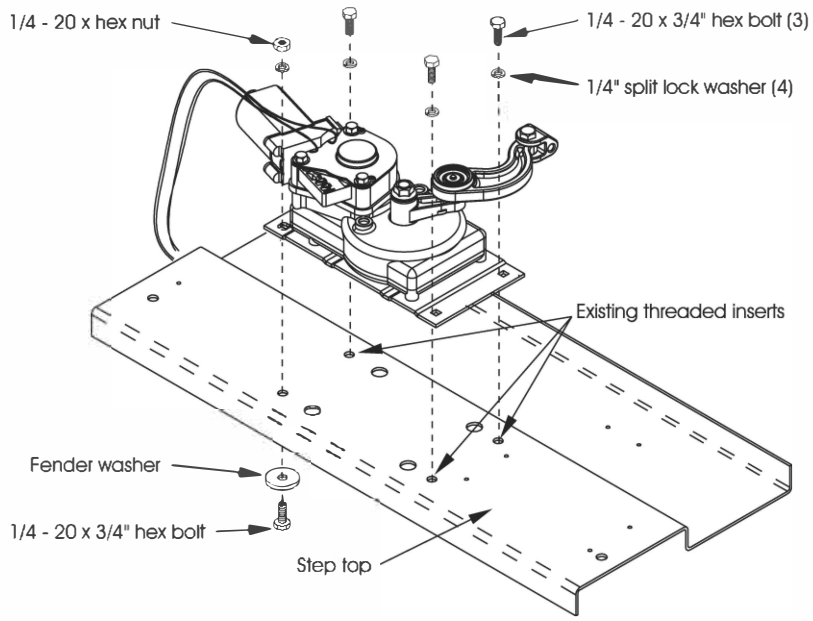

FIGURE 4: 34 Series Step

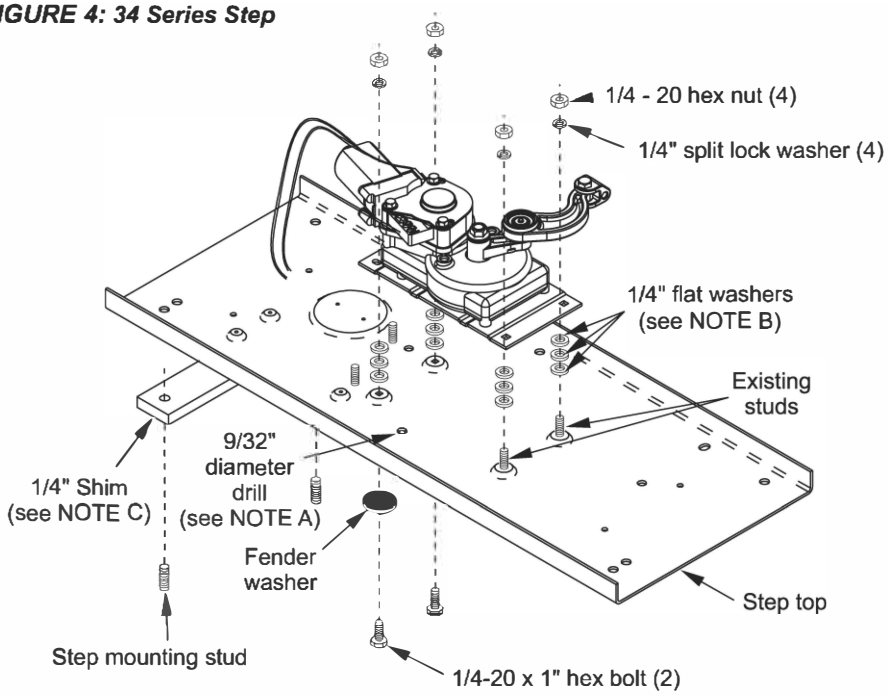

CCD-0011573 - REV: 8.24.2026

Step Owners Manuals

888 Owners Manual

For all Kwikee Electric Steps equipped with the 9095100000 Control Unit -- these steps began shipping in October 2004

880 Owners Manual

For Kwikee Electric Steps -- except the 42 Series -- equipped with any control other than the 9095100000

842 Owners Manual

For 42 Series Electric Steps equipped with a Permanent Magnet Motor

CCD-0011573 - REV: 8.24.2026

Kwikee®

Owner's Manual #888

© 9/04 Kwikee Products Co. Inc.
Kwikee #1422279 Rev. 1

Electric Steps

Equipped with a Permanent Magnet Motor

(For steps with Control Units 909510000 and steps without Control Units)

Single Steps

Double Steps

Triple Steps

Van Steps

Table of Contents

3 Identification Information

4 Introduction

5 Operating the Step

6 Maintenance:
- Lubrication
- Cam Stop Adjustment

8 General Service Notes

9 Troubleshooting and Testing Procedures

CCD-0011573 - REV: 8.24.2026

FILL OUT AND SAVE WITH VEHICLE RECORDS

In the event that servicing the step becomes necessary, the information that you supply below will improve service response time. The Step Series number, Serial number, and Control Unit numbers are on the identification labels attached to the control unit and the underside of the step, near the motor. Please take a moment to record this information:

Step Serial #	Step Series #
Year / Make / Model of RV	
Date of Purchase	

CONTROL UNIT Complete the following only if your step is equipped with Control Unit.

Control Unit Serial #	Control Unit #

STEP IDENTIFICATION AND REPLACEMENT PARTS INFORMATION

To determine replacement parts, refer to the chart for your Series Step.

CHART 1
Replacement Parts Kits for Series Steps 22, 23, 30, 32, 33, 34, 35, 36, 38, and 40

Parts Key #	Description	Replacement Kit Part #
1	Motor and screws 214	1101428
2	Cotter and Clevis pin	905205000
3	Gear/Linkage 'A' Curved	1101425
	Step Frame only	9080**000 **insert 2 digit Step Series number
	Step Light	909004000

Replacement Parts Kits for Series Steps 28, 31, 37, and 39 As shown in CHART 1 except for the following:

Parts Key #	Description	Replacement Kit Part #
4	Gear/Linkage 'B' Straight	1101426

Replacement Parts Kits for Series Steps 26 As shown in CHART 1 except for the following:

Parts Key #	Description	Replacement Kit Part #
5	Gear/Linkage 'C' Straight	1101427

Replacement Parts All Step Series

DOOR SWITCHES

Description	Replacement Part # (Black, Open)
Magnetic, small rectangular	905323000
3/4" core round	905324000
Magnetic, large rectangular	905326000
Magnetic, 3/8" core round	905327000
Plated plunger switch	905328000

ROCKER STYLE POWER SWITCH

Description	Replacement Part #
For all fully automatic steps.	905305000

SELF-CENTER ROCKER SWTICH

Description	Replacement Part #
Steps NOT equipped with control unit	905316000

Motor Assembly Drawing and Parts Key Numbers

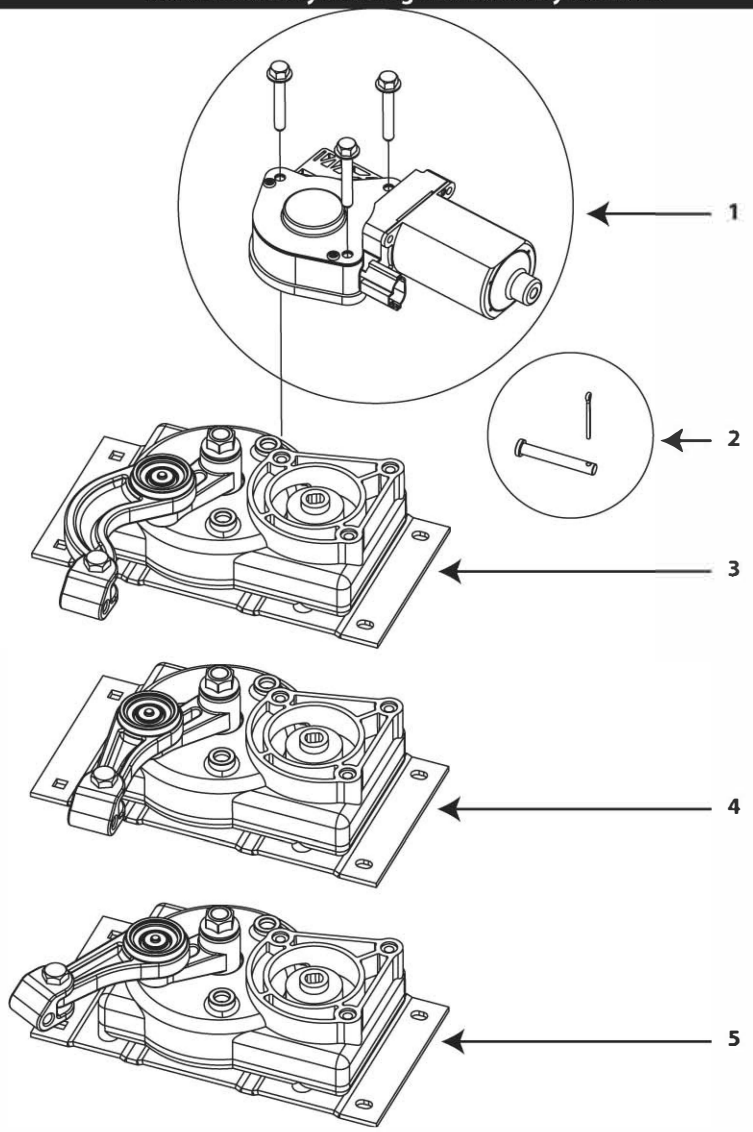

Replacement part numbers for steps equipped with **older style motor/gear box** are available online at: ***www.lci1.com*** See 'Downloadable Documents'

CCD-0011573 - REV: 8.24.2026

INTRODUCTION

STEPS WITH CONTROL UNIT

This manual has been provided to assist you with the identification, operation, maintenance, and troubleshooting of the Kwikee electric step equipped with a door switch, override switch, control unit and permanent magnet motor. This manual does not apply and should not be used as a reference to previous versions of a Kwikee electric step.

The control unit is essentially a current sensor as well as a switching device. When the motor assembly moves the step tread to its extended position, or stops moving because of an obstruction such as a curb or the binding of a damaged or bent step frame, the motor draws a larger amount of current. The control unit 'senses' the larger current draw and shuts off power to the motor.

All control units are equipped with an ignition override system. This system is designed so that the vehicle will not be driven with the step in the extended position. When the step is locked in the extended position (override switch is in the 'on' position), the door closed, and the ignition is turned on, the ignition override system will engage and the step will automatically retract.

The 'Auto Extend' feature is another safety feature designed to extend the step when the door is opened for the first time after the vehicle ignition is turned off, even if the override switch is turned on. When the ignition is switched on, the function of the override switch is disabled and the step will always extend when the door is opened and retract when the door is closed.

Some van steps use door-switch-only operation. When the door is opened the step extends and the step retracts when the door is closed.

NOTE: *Follow the instructions in this manual carefully. Failure to do so may result in damage to the step control, the motor and/or the vehicle wiring. Such damage may also result in voiding the warranty.*

STEPS WITHOUT CONTROL UNIT

This manual has been provided to assist you with the identification, operation, maintenance, and troubleshooting of the Kwikee electric step equipped with a self-centering rocker switch. This manual does not apply and should not be used as a reference to previous versions of a Kwikee electric step.

NOTE: *Follow the instructions in this manual carefully. Failure to do so may result in damage to the step, the motor, and/or the vehicle wiring. Such damage may also result in voiding the warranty.*

CCD-0011573 - REV: 8.24.2026

STEPS WITH CONTROL UNIT

1. After the installation is complete and with the entrance door open, turn the override switch to the 'off' position.

NOTE: *Some steps are not equipped with an override switch. They are activated only with a door switch.*

2. Close the door. The step should retract and lock in the 'up' position.

3. Open the door. The step should extend and lock in the 'down' position with the understep light illuminated.

NOTE: *The understep light is not available on all step models.*

4. If your step is equipped with a override switch, turn it to the 'on' position. The step should remain in the extended position with the understep light 'off' when the door is closed.

5. With the override switch turned on, the step extended, and the entrance door closed, turn the vehicle ignition on. The ignition override system will go into effect and the step will automatically retract.

NOTE: *If the yellow wire from the four-way connector is not connected to an ignition power source, the ignition safety system will be inoperative and the step will remain in the extended position. In this case, the override switch must be turned off for the step to retract.*

WARNING: If the vehicle is driven with the step in the extended position, there is the possibility of causing major damage to both the step and the vehicle.

6. Turn the vehicle ignition off and open the door. The step will extend and lock in the 'down' position. This is the 'Auto Extend' feature.

When the vehicle ignition is turned on, the step will always activate with the door movement, regardless of the override switch position.

NOTE: *If the yellow wire from the four-way connector is not connected to an ignition power source, the ignition will not cause the step to retract if the override swtich is on, regardless of the door position.*

STEPS WITHOUT CONTROL UNIT

1. To extend the step, push and hold the bottom half of the rocker switch. Make sure the step is completely extended and locked in position before releasing the switch.

WARNING: Stepping on a partially extended step can cause damage to the step frame.

2. Push and hold the top of the rocker switch to retract the step. Be sure the step is completely retracted and locked in position before releasing the switch.

NOTE: *Always be sure that the step is fully retracted before traveling. If the step is left extended and strikes an obstruction while the vehicle is moving, major damage to both the step and the vehicle could result.*

WARNING: Do not hold the switch in for longer than it takes to either extend or retract the step or damage to the motor will result.

NOTE: *The extend/retract function will be reversed if the red and yellow terminal connections are reversed or the step is equipped with a reverse-driven motor assembly (such as on the 37 and 42 Series steps).*

CCD-0011573 - REV: 8.24.2026

MAINTENANCE

FIGURE 1

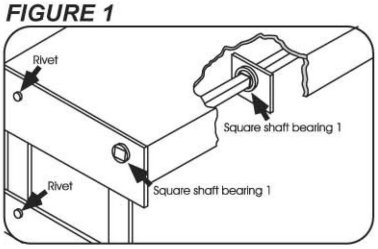

FIGURE 2

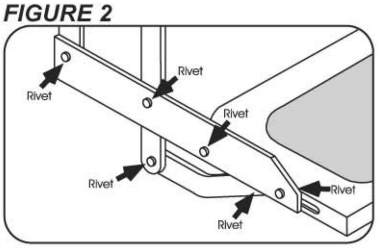

FIGURE 3

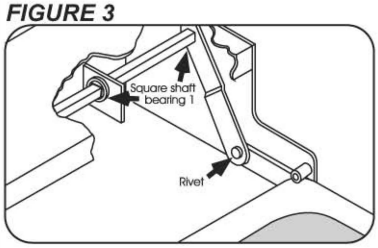

FIGURE 4

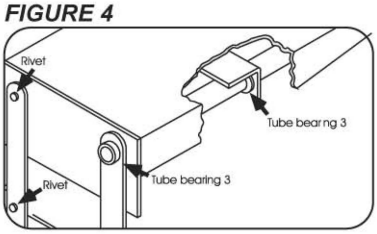

FIGURE 5

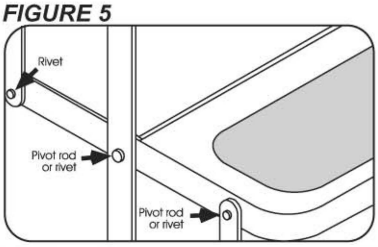

FIGURE 6

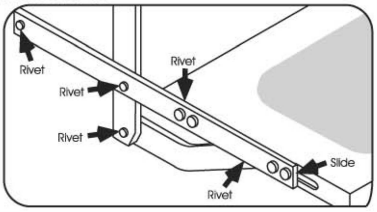

FIGURE 7

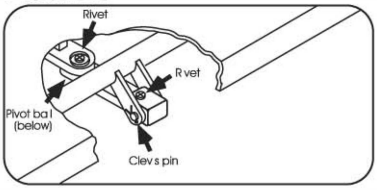

LUBRICATION

Clean all mud, salt, and road grime from the step before lubricating. Lubricate all moving parts (bearings, pivot points, slides, clevis pin, and drive linkage ball) every 30 days with a good quality moisture and heat resistant penetrating grease. KwikLube™ Spray Grease is specially formulated to lubricate Kwikee Electric Steps and is recommended for lubricating all moving parts. Refer to the figures below for lubrication locations.

NOTE: *Silicone lubricants and WD-40 are not recommended as they have a tendency to evaporate and dry the mating surfaces which leave them vulnerable to the elements.*

NOTE: *Figures are to be used for general reference purposes only. Some may not pertain to your particular step model.*

1. ***Figures 1 and 3:*** Square shaft bearing - lubricate around outside and under head of bearing.

2. ***Figure 4:*** On step models equipped with plastic cover, this cover will have to be removed to lubricate center bearings. Lubricate bearings under cover every 90 days.

3. ***Figure 4:*** Lubricate around the bushing-in-bushings.

4. Maintain clean, dry electrical connections at the two-way and four-way connectors and any butt connections leading from the four-connector to the vehicle. A small dab of di-electric grease at the connections and replacing corroded butt connections with heat shrink type crimp style automotive connectors will help maintain a good electrical source for the step.

KwikLube™ is a unique aerosol grease that has hundreds of automotive, household, and industrial uses in addition to lubricating Kwikee Electric Steps.

KwikLube sprays on (and into) places that are hard to reach. Then it changes from a penetrating fluid to a ***tough, protective grease*** in a matter of minutes!

The cured ***KwikLube*** film is impervious to moisture and can withstand temperatures above 400° F (204° C). This formulation also contains additives to prevent rust and reduce wear.

Ask your local RV Dealer for KwikLube

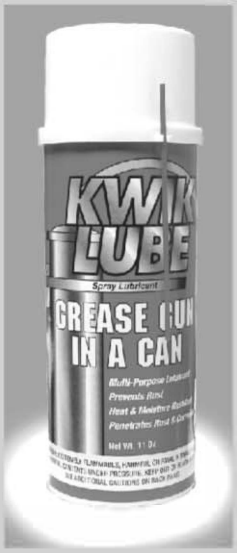

MAINTENANCE IN SALT ENVIRONMENT

To maintain step finish when step is exposed to a salt environment for extended periods of time, routinely spray step with fresh water.

CCD-0011573 - REV: 8.24.2026

ADJUSTING THE CAM STOPS

24, 25, 27, 32, 34, 35, 36, 38, and 40 Series Steps

Kwikee steps are fitted with adjustable cam stops on the step frame that help lock the step in the 'out' position, creating a firm stepping platform. The cam is adjusted at the factory but may fall out of adjustment and need to be tightened due to the rigors of shipping, installation, and normal use.

The cam stops are located under the step top on the 32, 36, and 38 Series Steps, and on the bottom tread side rail on the 24, 25, 27 and 40 Series Steps. There is one stop on each side of the step.

***WARNING:* When the cam stops are out of adjustment, the step may feel loose or 'mushy' when stepped on. If the cam stops are not properly adjusted the step may not extend fully to the locked-out position. Using a step with loose or out-of-adjustment cam stops may cause damage to the motor assembly and/or the drive linkage.**

***CAUTION:* When working under the step, be sure that the step cannot be activated and that nothing can get caught in the step mechanism.**

1. Loosen the stops so they move freely and retract the step.

2. Extend the step fully to its locked extended position (see ***Figure 8***). Be sure that the motor assembly linkage rests against the gear case as illustrated in ***Figure 8***. Repeat if needed until the motor assembly locks in the extended position.

***CAUTION:* Be sure that nothing can get caught in the step.**

3. Push the stops against the leg and tighten securely (see ***Figure 9***). Be sure that both stops are tightened and that they rest securely against the leg.

4. Retract and fully extend the step. Check the motor assembly to be sure that it is locked all the way out, and that both stops are secure against the legs. Repeat the above procedures if needed to properly adjust the stops.

5. Push on the front edge of the step tread. If the step seems loose, repeat the above procedures. The stops may not be properly adjusted so that they rest tightly against the leg.

FIGURE 8: Gearbox and motor assembly.

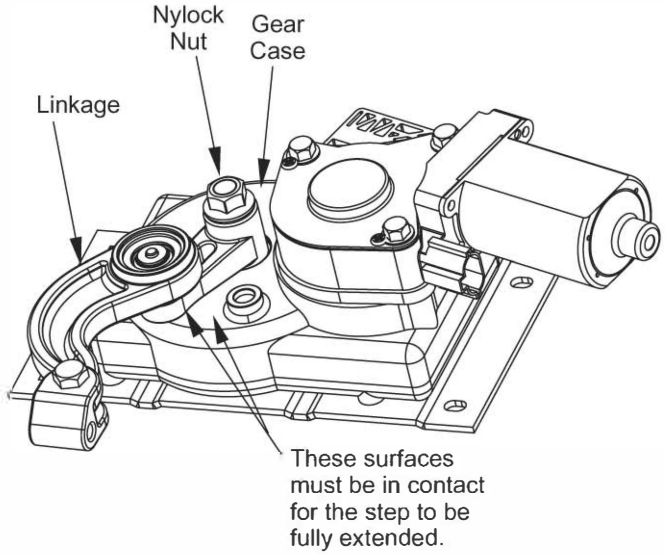

FIGURE 9: Stop location and assembly, 32, 34, 36, and 38 Series Steps

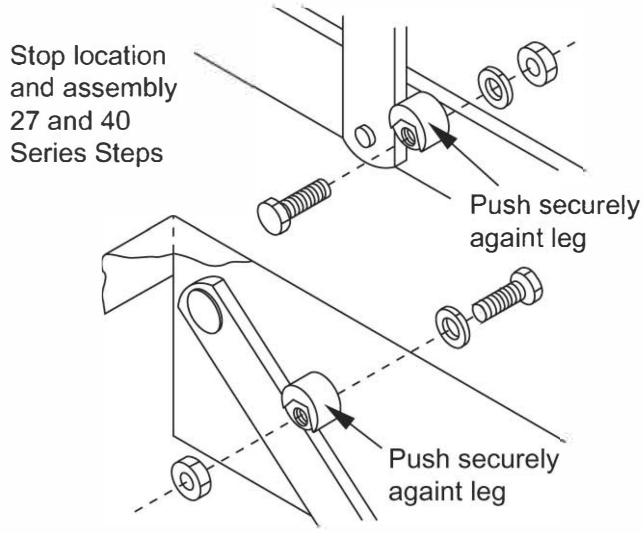

CCD-0011573 - REV: 8.24.2026

GENERAL SERVICE NOTES

These general service notes and the Step Test Procedures address the most common questions about Kwikee electric steps. Due to the number of variable conditions, you may experience symptoms other than those covered. Please feel free to contact the Customer Service Department at 574-537-8900 for further information or assistance.

If the power wire to the step is disconnected from its source and reconnected, a spark is common. This is caused by the momentary charging of the control unit and does not necessarily indicate the system is staying on, which would cause a drain on the battery.

To determine if a control unit is not shutting off, remove the four-way connector to the chassis and the two-way connector between the step motor and the contol unit. Place a voltmeter between the red and yellow motor wires at the two-way connector from the control unit. Reconnect the four-way Connector. Turn the override switch to the 'off' position. If any voltage registers on the meter for more than 5 seconds, the control unit is not shutting off and may be defective. When doing this test, switch the voltmeter leads back and forth between the red and yellow motor wires to be sure no voltage registers.

If any voltage registers, disconnect the four-way connector to keep the step motor from overheating. If zero voltage is present, the control unit has shut off and is normal.

If the step does not work or operates erratically (for example, extends part way and shuts off) the first item to check is the vehicle battery. Low supply voltage may cause erratic operation of the step. Poor ground connections may also cause erratic operation of the step. Check battery voltage and condition. A battery in good condition and properly charged will have a no load voltage of approx. 12.6 volts. Check the voltage at the battery and at the four-way connector at the control unit. Insure that all battery and step control unit connections are clean and secure. Recharge or replace the battery as necessary and retest the step for proper operation.

The step may also operate erratically if it is operating directly from a converter and the converter output is not adequate or properly filtered for clean DC voltage. The converter must be capable of producing a minimum of 30 amps for proper step operation.

The step will not function if the ground to the control unit is lost between the step control unit and the vehicle chassis (the long green ground wire) or between the vehicle battery and the ground (negative battery cable). Make sure the battery terminals and all wire connections are clean and tight. Verify that all wires meet the minimum requirements specified in ***Figures 10, 11, and 12*** on Page 10.

TROUBLE-SHOOTING AND TESTING PROCEDURES

The step test procedures on Page 9 are provided to troubleshoot and test all Kwikee automatic electric step functions. The procedures are designed to initially check the basic functions of the step separately from the RV wiring to determine whether or not the step is malfunctioning. The procedures test various components of the step until the source of the malfunction is located. Using the procedures will shorten and reduce the time spent troubleshooting.

Some portions of the test procedures require additional equipment. This equipment includes:

- -- voltmeter
- -- well charged 12 volt DC automotive battery
- -- 4-way connector/pigtail (Part #90930600, available from Kwikee).

Read the entire procedure prior to testing. If you need assistance contact Kwikee's Service Line at (574) 537-8900.

CCD-0011573 - REV: 8.24.2026

TESTING THE STEP

1. Inspect the step for visible damage that might restrict step operation.

2. Obtain a 4-way pigtail connector (part #909306000) from Kwikee.

3. Disconnect 4-way connector on underside of step and connect the step-half of the connector to the four-way connector pigtail. ***See Figures 10, 11, and 12 on Pages 10 and 11.***

4. Set a fully charged 12 volt DC automotive battery beside the step. **ATTENTION: Do not allow the battery terminals to come in contact with the step.** Complete a ground for the step tests by connecting a 10 gauge wire from the negative (–) battery post to the green ground wire of the control unit.

***WARNING:* 12 volt automotive batteries contain sulfuric acid which can cause severe burns. Avoid contact with the skin, eyes and clothing. 12 volt automotive batteries produce hydrogen gas which is explosive; keep cigarettes, open flames and sparks away from the battery at all times.**

5. To supply power, attach the red wire from the pigtail to the battery's positive (+) post. The step will extend.

IMPORTANT INSTALLER NOTES:
Be sure that all ground connections are securely fastened with good metal-to-metal contact. A good ground is required for proper step operation.

6. With the power and ground connections complete, all functions of the control unit can be checked at the four wires of the pigtail. The brown wire is the door switch, the white wire is the override switch, and the yellow wire is the ignition override.

WARNING: Keep fingers, arms, and legs clear of step mechanism while performing these tests.

7. To retract the step, touch the brown wire to the negative (–) terminal.

8. To extend the step remove the brown wire from the negative (–) terminal.

9. To test the ignition override feature, extend the step as in Step 8. With the step extended, connect the white wire to the positive (+) terminal and attach the brown wire to the negative (–) terminal. Next, touch the yellow wire to the battery's positive (+) terminal. The step should retract. Remove the brown wire and the step should extend.

To test the "Auto Extend" feature, touch the brown wire to the negative (–) terminal to retract the step. While holding the brown wire to the negative (–) terminal, remove the yellow from the positive (+) terminal. Touch the white wire to the positive (+) terminal. The step will stay retracted.

Now, remove the brown wire and the step should extend.

Next touch the brown wire to the negative (–) terminal. The step should stay extended.

VAN STEPS

If the van step is equipped with a splash cover, remove the cover to access motor assembly and control unit. If step is locked in retracted (up) position and the plastic cover can not be removed, disassemble the step tread to access the plastic cover.

To disassemble the tread, remove the (8) 1/4-20 x 1" long hex head bolts in tread side rails (connects tread and sliding blocks to side rail. This allows the tread to drop out of the way and the plastic cover to be accessible.

Reassemble the tread after removing the cover. Reinstall the cover after testing procedures and any necessary repairs are complete. Fully extend the step to reinstall the cover. Be sure that the four-way connector exits the notch in the plastic cover when reassembling.

CCD-0011573 - REV: 8.24.2026

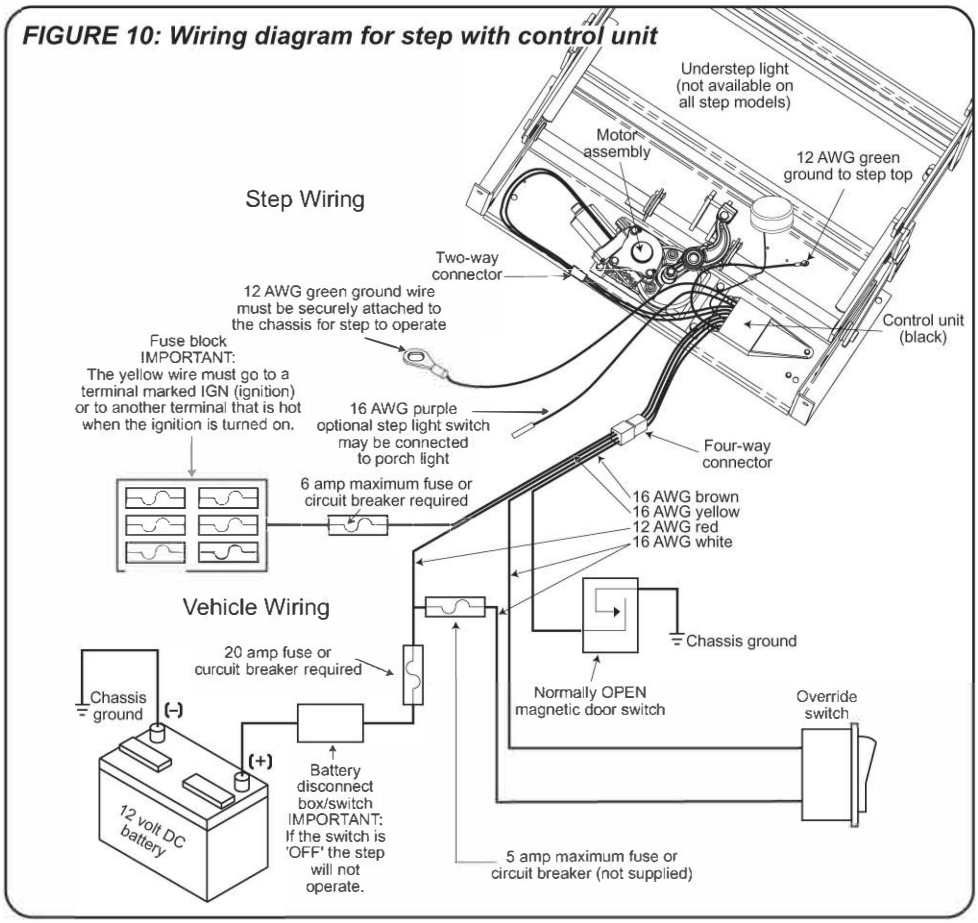

FIGURE 10: Wiring diagram for step with control unit

10. If any of the step functions do not work, the source of the malfunction is either in the control unit and/or the motor. Proceed to the "Testing the Motor" section on Page 11.

If all of the step functions do work, the malfunction is either in the door switch, power switch, or the vehicle wiring. Proceed to "Testing the 4-way Connector" section on Page 11.

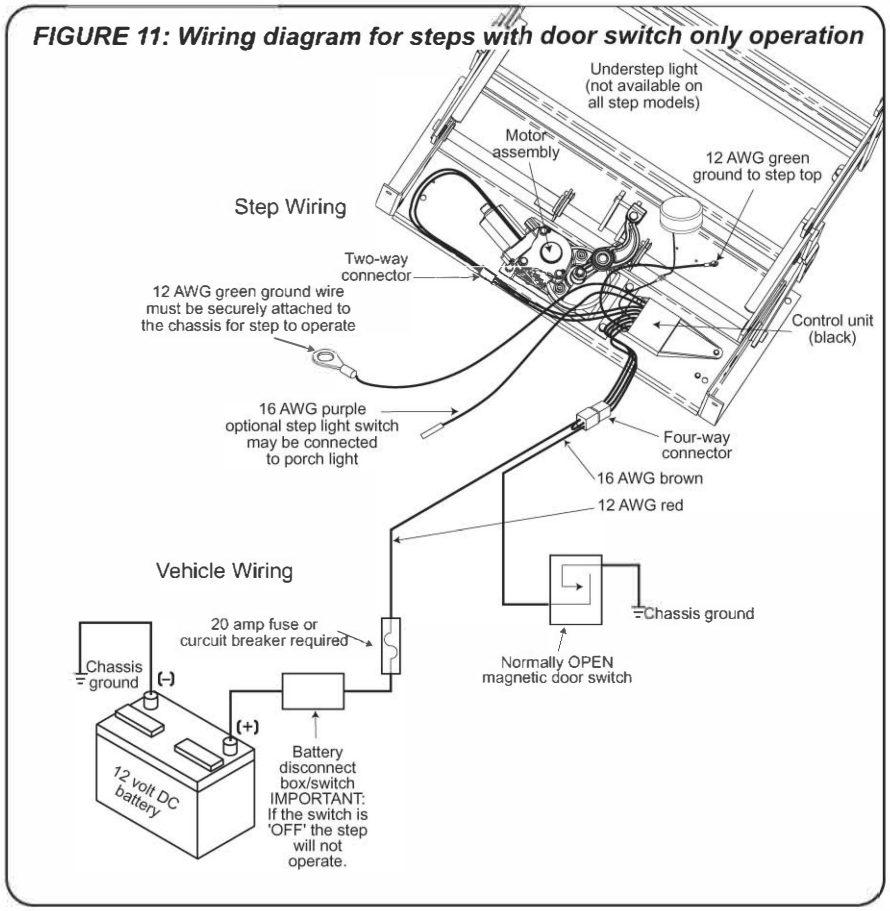

FIGURE 11: Wiring diagram for steps with door switch only operation

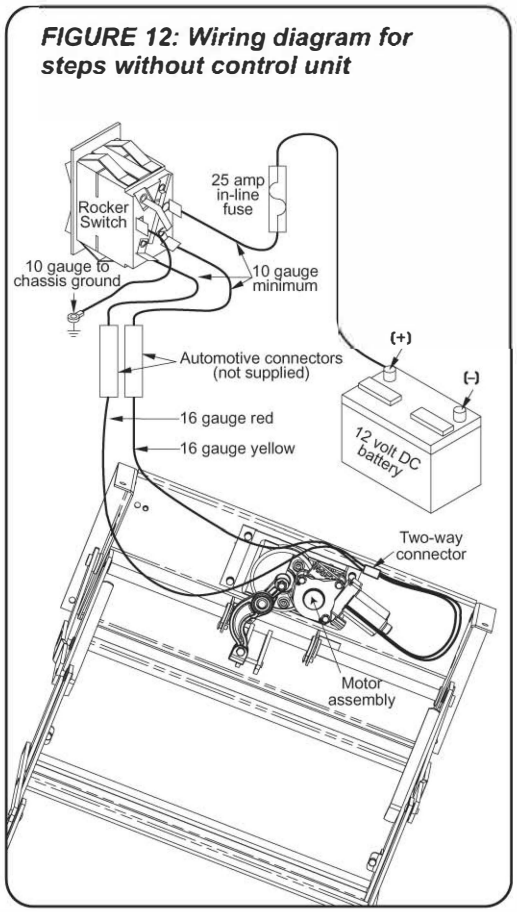

FIGURE 12: Wiring diagram for steps without control unit

CCD-0011573 - REV: 8.24.2026

TESTING THE MOTOR

11. Disconnect the two-way connector between the step motor and the control unit.

Connect the motor's red wire to the positive (+) terminal of the battery and touch the motor's yellow wire to the negative (–) terminal of the battery to extend the step. To retract the step, reverse the connections. If the step extends and retracts during this test, the condition of the step motor is good.

NOTE: *On steps with reverse polarity plug (part number #1800711) reverse the red and yellow wire connections to perform the previous test.*

WARNING: Do not leave the wires connected during this test once the step has cycled either in or out. Failure to remove the wires from the battery will burn out the motor voiding any warranty.

TESTING THE 4-WAY CONNECTOR

12. To check the main power source, connect a voltmeter between the red wire from the 4-way connector (vehicle half) and the ground terminal at the end of the control unit's green ground wire (see ***Figure 13***). The reading should be a minimum of 12 volts DC.

If the voltage reading is low, there may be a loose or corroded connection at the battery, a low charge level on the battery itself, or a poor ground. If the voltage reading is zero (0) volts, check the step fuse/circuit breaker, all connections, and the condition of the wiring between the battery and the plug, including the ground connection at the chassis.

13. To check the override switch, connect a voltmeter between the white wire from the 4-way connector (vehicle half) and the terminal at the end of the control unit's green ground wire (see ***Figure 14***). The reading should be a minimum of 12 volts DC (the same as in Step 12) when the switch is on, and zero (0) volts DC when the switch is off.

If the voltmeter reads zero (0) volts when the override switch is on, there is a problem in the power switch circuit.

Check the 6 amp in-line fuse, the override switch itself and the condition of the circuit's wiring and terminal connections.

14. To check the door switch, connect a voltmeter between the red wire from the 4-way connector (vehicle half) and the brown in the same connector (see ***Figure 15***). The voltage should be a minimum of 12 volts DC (the same as in step 12) when the door is closed and zero (0) volts when the door is open.

If the readings are incorrect, there is a problem with the switch. Check the door switch and the condition of the circuit's wiring and terminal connections.

FIGURE 13: Main power source

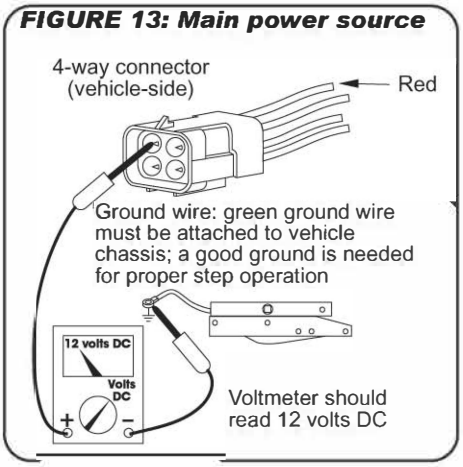

FIGURE 14: Override switch

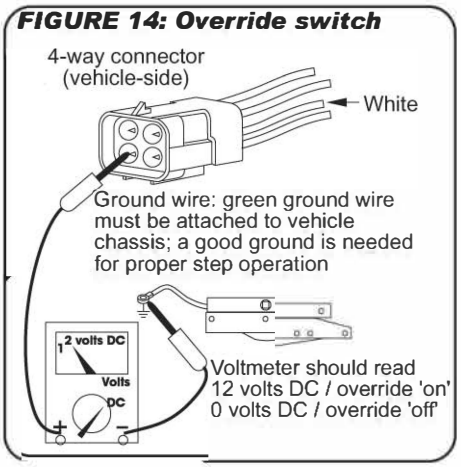

FIGURE 15: Door switch

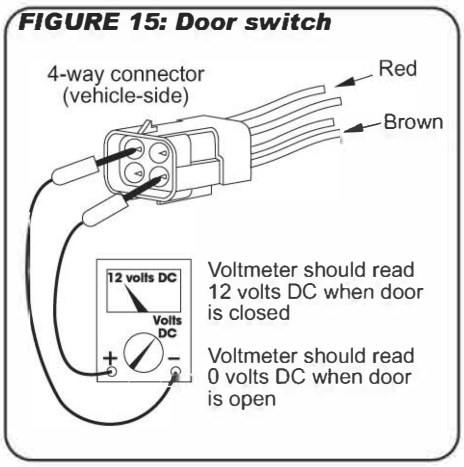

CCD-0011573 - REV: 8.24.2026

15. To check the ignition override system, connect a voltmeter between the yellow wire from the 4-way connector (vehicle half) and the ground terminal on the end of the control unit's green ground wire (see ***Figure 16*** on Page 12.) The voltage reading should be approximately 12 volts DC when ignition is on and zero (0) volts when ignition is off.

If the reading is zero when the ignition is on, check all terminal connections, wiring, and the vehicle's ignition fuse.

NOTE: *The step wiring circuit must be independent. No other device (i.e. alarm systems, step well lights, etc.) can be connected to the step wiring circuit. Any device connected to the steps wiring can cause the step to malfunction and will void the warranty.*

16. For steps equipped with door switch only operation: Connect the white jumper wire from the vehicle half of the four-way connector and the ground terminal at the end of the control unit's green ground wire (see ***Figure 17***).

NOTE: *Be sure to use the terminal with only the white wire.*

The reading should be zero (0) volts DC. If the voltage reading is more, the white wire is connected to 12 volts and should be cut.

If you have additional questions or need more assistance, contact Kwikee's Service Representative at (574) 537-8900.

FIGURE 16: Ignition override

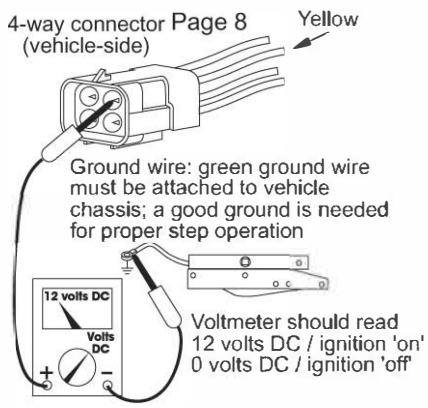

FIGURE 17: Connector

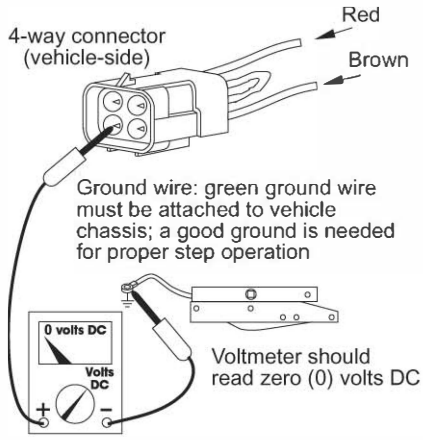

Kwikee®

Wiring Instructions #7543

© 01/05 Kwikee Kwikee #1421225 Rev. 2

WARNING: Be sure the vehicle battery is disconnected before starting any wiring procedure.

Before beginning any wiring procedure, be sure you understand the wiring diagram for your particular step model. Be careful to select the proper wire size, length, and color as well as the proper crimp on terminals and connectors for each application as called for in wiring diagram and instruction sheet.

Improper wiring can cause damage to the step control unit and the vehicle's wiring system. Improper wiring will void the step warranty.

Tools needed:

Electric drill
15/32" dia. drill (or 3/8" drill and a round file)
Wire cutters
Wire strippers
Terminal crimper
Electrical tape
Flashlight or drop light
Safety glasses

Kit Contents:

Qty	Description
1	Wiring Harness
1	2' green 16 ga. wire
1	20 amp inline fuse holder
2	5 amp inline fuse holders
8	Wire ties
7	Blue butt connectors
2	Yellow butt connectors
1	1/4" male push on terminal
1	5/16" blue ring terminal
1	5/16" yellow ring terminal
1	#6 blue ring terminal
1	#6 external tooth lock washer
1	1" of caulking compound
1	Power switch (toggle switch)
1	Caution sticker
1	Instructions

Kwikee®

Wiring Installation Instructions

For steps operated by a Door Switch and Power Switch with Control #909510000

NOTE: The step mounting brackets should be mounted and the door switch should be installed before continuing with any wiring.

Installation Instructions

Step 1) Wrap electrical tape around the black plastic loom of the wiring harness every 10-12".

Step 2) Route the wirng harness from the vehicle battery to the step with the four-way Packard-style connector terminating at the step.

WARNING: ***Keep the wiring harness away from any heat generating or moving parts on the vehicle.***

Step 3) Mount the step if not already done. The complete mounting instructions are included with the step mounting brackets.

Step 4) Route and attach the brown wire from the wiring harness to the door switch using a blue butt connector

Step 5) Tie any loose wires in place with the wire ties. If necessary, the wire ties can be held in place with a #6 or #8 sheet metal screw (not supplied.)

Step 6) Under the hood, feed the white and yellow wires from the wring harness and one end of the separate white 16 ga. wire (not supplied) through the firewall and into the passenger compartment. This may be done through an existing rubber grommet around the speedometer cable or by drilling a hole.

WARNING: ***Do not drill a hole unless you are absolutely sure there is nothing on the other side of what you are drilling through. Do not feed wires through the firewall where there may be moving parts. Grommet the hole to avoid damaging the wiring.***

Step 7) Locate and cut a 15/32" diameter hole in the dash to mount the override switch. Before you drill the hole, be sure that there is enough room to mount the switch behind your hole location. Do not install the switch at this time.

Step 8) Route both white wires to the power switch location, cut to length (leave a little slack), and connect them to the switch using the 1/4" blue female push on terminals. Tie any loose wires in place with the wire ties.

Step 9) Mount the override switch in the dash by inserting it through the hole in the dash from the back side and securing it with the face plate and nut.

Step 10) Run the yellow wire to the vehicle fuse block and cut to length. Cut the orange wire on the 5 amp fuse holder at the halfway point on the loop. Crimp a 1/4" male push on terminal to one lead of the fuse holder. Connect the other lead to the yellow wire with a blue butt connector. Wrap this connection with electrical tape. Connect the wire to the vehicle's fuse block at the terminal marked IGN (ignition) or to another terminal that is hot only when the ignition is turned on.

WARNING: Do not connect the yellow wire to the circuit connected to the vehicle's computer or damage to the computer or the step control unit may result.

CCD-0011573 - REV: 8.24.2026

Step 11) Under the hood, run the other end white 16 ga. wire from the override switch to the battery location. Cut both the white and red wires to length.

Step 12) Cut the orange wire on the remaining 5 amp fuse holder at the midway point of the loop. Crimp a blue 5/16" ring terminal to one lead of the fuse holder. Connect the other lead to the white wire with a blue butt connector. Wrap this connection with electrical tape.

Step 13) Cut the wire loop on the 20 amp fuse holder at the midway point of the loop. Crimp a yellow 5/16" ring terminal to one lead to the red wire from the wiring harness with a yellow butt connector. Wrap this connection with electrical tape.

Step 14) Connect the red and white wires to the positive (+) battery terminal clamping bolt.

NOTE: Some vehicles have a distribution block located near the battery that is connected directly to the battery. The red and white wires may be connected here instead of the battery clamping bolt.

WARNING: ***Do not connect this wire into any other circuit in the vehicle. Tie any loose wires in place with the wire ties.***

Step 15) At the step, attach the four-way Packard-style connector from the wiring harness to the connector from the step control unit.

Step 16) Reconnect the vehicle battery.

Step 17) Place the *"Caution - Stand Clear"* sticker on the outside of the van on the window glass or near the door handle where it will be easily seen.

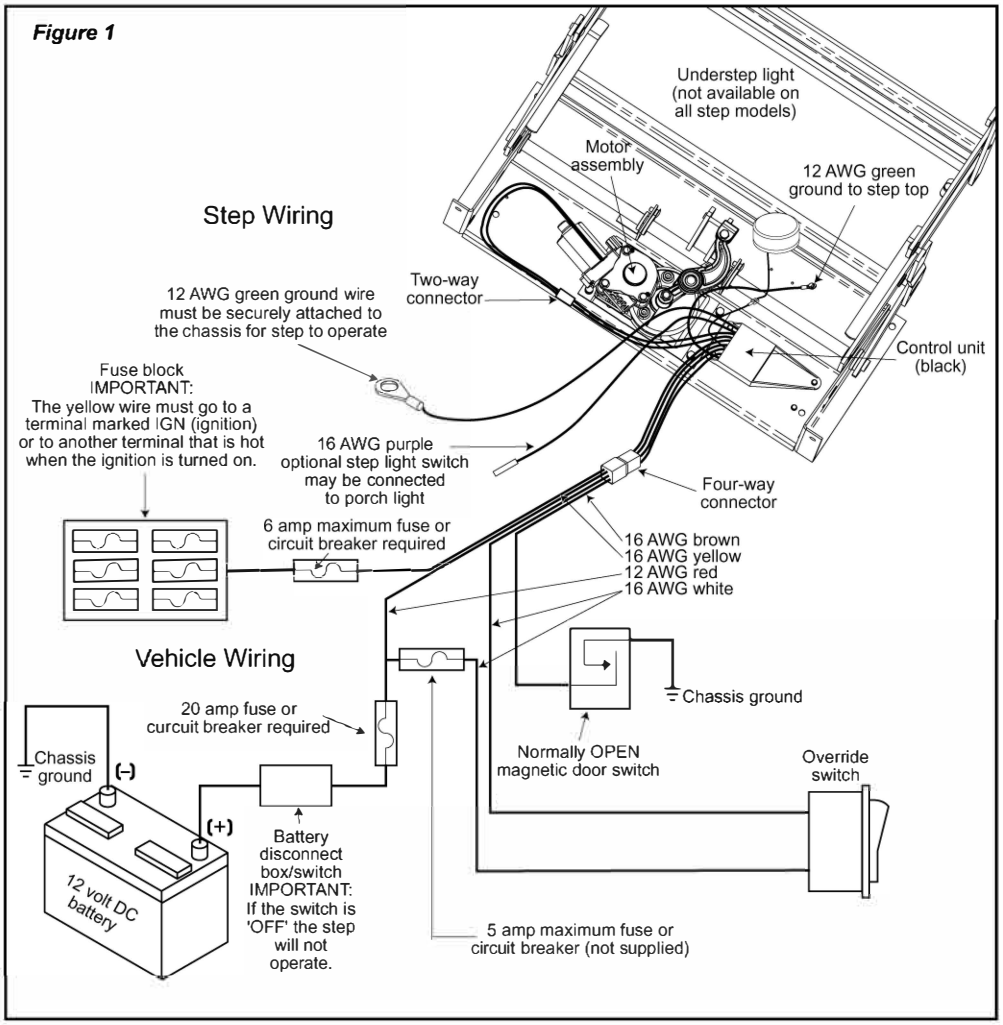

Test Step Operation

Step 18) With the override switch off, close the van door and the step should retract.

Step 19) Open the door and the step should extend.

Step 20) With the door open, turn on the override switch. The step should remain extended when the door is closed.

Step 21) To test the ignition override system, with the step extended, the door closed, and the override switch on, turn on the vehicle ignition and start the vehicle. The step should retract.

WARNING: ***When the ignition safety system goes into effect and the step automatically retracts, do not open the door until the step completely retracts. If the door is opened before the step completely retracts and locks in the up position, the step will stop moving. The step may only be partially extended. Stepping on a partially extended step may cause damage to the step frame and/or the motor assembly. When the door is closed the step will finish retracting.***

If the entrance door is opened at any time the step will extend or stay extended.

Kwikee®